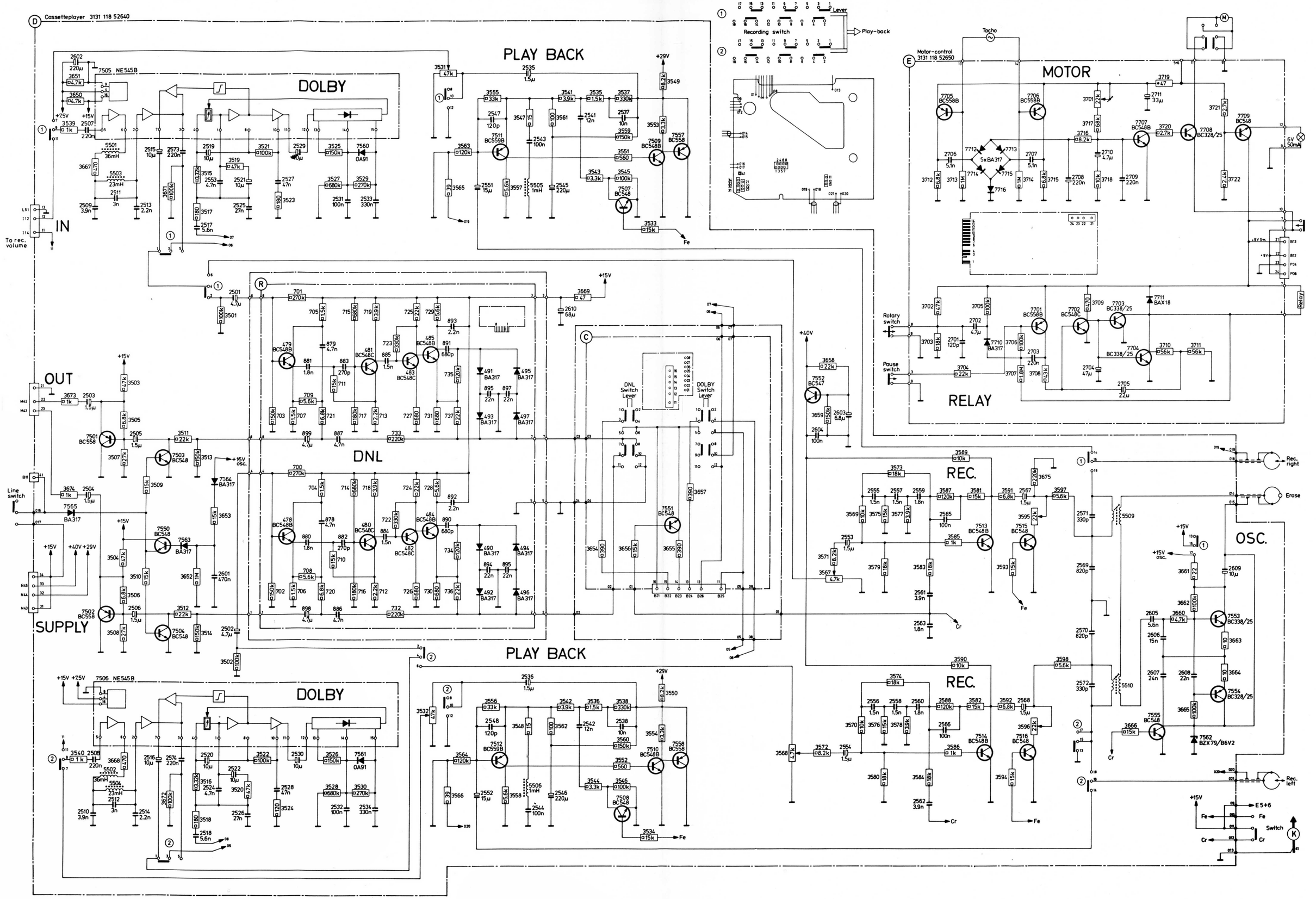
Cassetteplayer 3131 118 52640
PLAY BACK
DOLBY
IN
To rec. volume
OUT
SUPPLY
Line switch
DNL
PLAY BACK
DOLBY
Recording switch
Lever
Play-back
Motor-control 3131 118 52650
Tacho
MOTOR
RELAY
Rotary switch
Pause switch
REC.
REC.
OSC.
Rec. right
Erase
Rec. left
Switch
DNL Switch Lever
DOLBY Switch Lever