PHILIPS

APPLICATION BOOK

PHILIPS ELECTRONIC COMPONENTS AND MATERIALS DIVISION

IGNITRONS

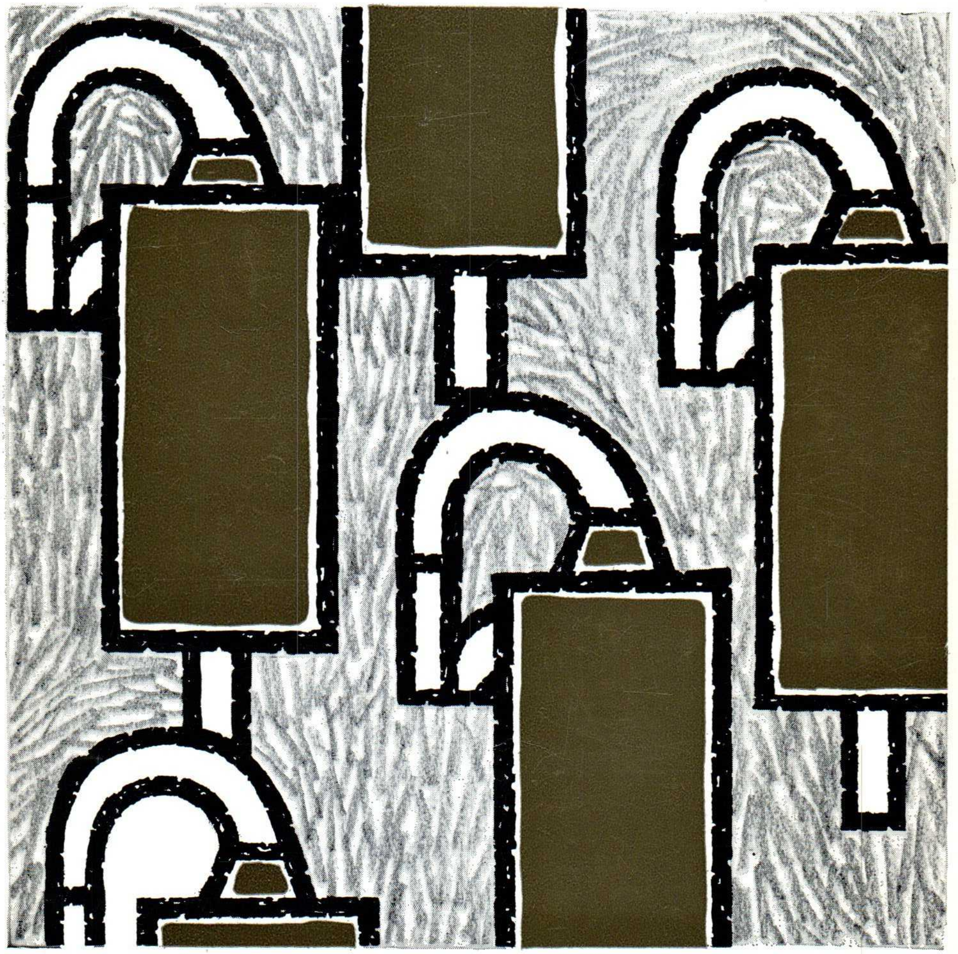

IGNITRONS

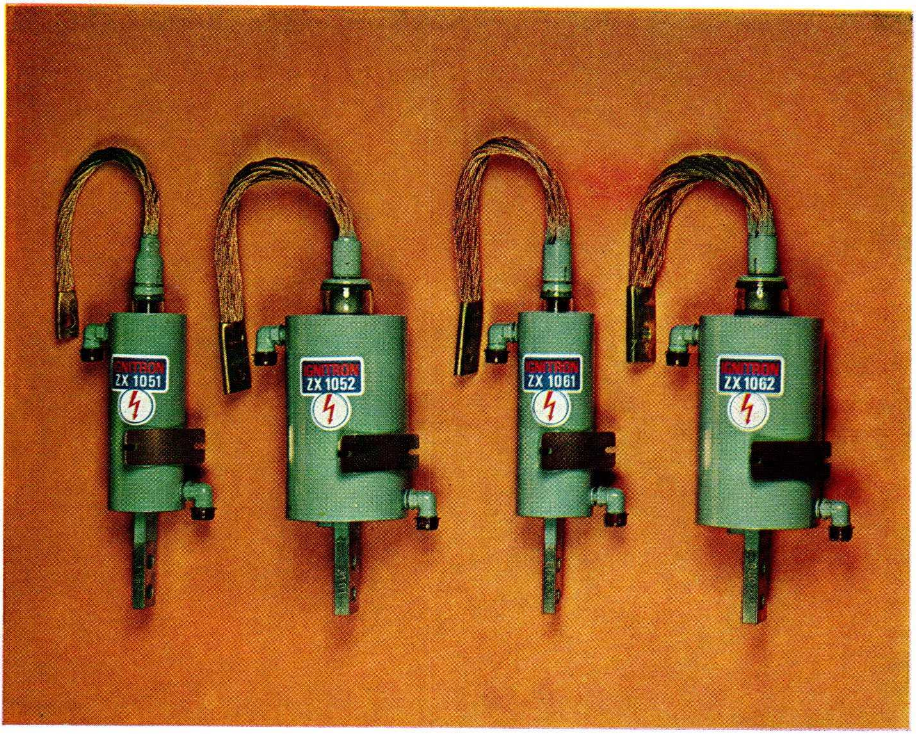

Four types of ignitron tubes.

Ignitrons

P. J. Baker *Editor*

●

Technical Publications Department

ELECTRONIC COMPONENTS AND MATERIALS DIVISION

EINDHOVEN - The Netherlands

September 1968

Contents

Acknowledgements

Acknowledgement is made to the following members of the departments concerned, who assisted in the preparation of the manuscript.

Bloebaum, H.
Bosch, A. J. M. van den
Daelen, H. J. van
Hagevoort, E.
Lentz, J. P.
Muller, H. C.
Orden, J. H. van
Vissenberg, M.

Thanks are expressed to the editors of the journals and the authors of the articles quoted in the references, who kindly consented to their material being used.

We wish to thank the following companies who kindly gave their permission for the reproduction of the illustrations shown on the pages indicated:

N.V. Daf Automobielfabrieken, Eindhoven, (N.Br.), Holland, pages 36 and 37.

N.V. Drenta, Emmen, (Dr.), Holland, pages 36, 50 and 51.

The Square D Co., Milwaukee, Wis., U.S.A., pages 75 and 77.

Volkswagenfabrieken G.m.b.H., Wolfburg, W. Germany, pages 45, 55 and 58.

The colour plates on pages 7, 9, 10, 11 and 34 are taken from Philips Educational Products and Systems' film strips entitled "Physical Principles of Electronics" (The Ignitron).

Foreword

This book is the successor to a number of previous publications on ignitron tubes and presents an entirely fresh approach to the subject. It is hoped that the book will serve as a valuable source of reference for the designer of ignitron-controlled systems and the user of ignitrons, and also the technical student, providing them with all the pertinent information they may require on this subject.

Despite the inexorable advance of modern technology a long and useful future would seem assured for a device that can for example, deliver a current pulse of 100 000 A peak with an average current of milliamps in a few microseconds or alternatively, provide an average current of 50 to 100 amps at only 1000 A peak.

The comprehensive treatment contained in the following pages is born of the wealth of hard-won experience gained in the development, production and use of these tubes by the manufacturer. It will be of interest to the reader to note that long before the first ignitron was produced by our laboratories, an igniter was developed that was later to win international acclaim and find application not only in our ignitrons but also in several types of e.h.t. mercury vapour rectifiers.

Obviously, the rise to ascendancy in any branch of technology does not occur overnight. It is only through long and complete dedication and dogged perseverance on the part of a few engineers, technicians and co-workers that the reliable, high-quality product that is our present-day ignitron was made possible. I am thinking here especially of the late *P. Bravenboer* who, with his team of engineers, devoted more than 15 years to the continued development of our ignitron.

In conclusion I would like to add that in my own long experience, one factor has emerged which has proved to be of the utmost value and importance in the quest for optimum quality in our product. This is, quite simply, mutual understanding and full co-operation between manufacturer and user. Indeed, it would not be an exaggeration to say that without the continuous exchange of ideas, a joint approach to solving problems and the readiness to appreciate one another's difficulties, the position of leadership which we hold in this field today would not have been achieved.

K. W. Hess
(former Quality Control Engineer, Ignitrons)

1 Introduction

In applications where large currents and high peak powers are to be accurately controlled, the use of ignitrons in the primary circuit instead of mechanical or electromechanical contactors offers many advantages. Though contactors can be employed in certain fields their use is limited to operations requiring a low duty, their inherent inertia and susceptibility to wear making them unsuitable for applications where precision control at high switching speeds is required. Moreover, the performance of mechanical switching elements at high currents deteriorates rapidly owing to oxidation and erosion of the contact areas after continued use, which further reduces the degree of precision obtainable and necessitates frequent skilled maintenance. Ignitron tubes overcome these problems most satisfactorily and have proved to be an excellent substitute for electromechanical contactors, without the attendant limitations and disadvantages.

The ignitron operates as a valve, i.e. conventional current flow is unidirectional from anode to cathode, thus when an alternating current is to be controlled a pair of tubes connected in a configuration known as anti-parallel, behave as an inertialess contactor, having a switching time of less than 50 μs. This represents 1/200 of one half-cycle of 50 Hz mains and is less than 1/200 of the time required to operate an ordinary electromagnetic contactor. Moreover with an ignitron, the point on the cathode where the arc is formed is continuously being renewed, thus reliability is better and maintenance of the type required with mechanical contactors rendered unnecessary.

By far the widest and best-known application of ignitrons in industrial electronics is in resistance welding installations, where they have gradually replaced older, less efficient heavy current switching methods. The tubes are used nowadays almost exclusively whenever reliable, fully automatic, single-phase and three-phase welding control on a mass production basis is required.

In high power rectification where continuous high average currents are encountered and consequently more severe requirements imposed on the rectifying medium, special ignitrons have been designed. These incorporate a number of additional features to adapt them to the role of a rectifier. With several tubes connected in a suitable three-phase configuration, high values of d.c. power are obtainable which may be used in applications such as d.c. motor drives.

Ignitrons have also proved to be useful in the control of electric furnaces. When operated in conjunction with a suitable heat transducing element, fully automatic control of furnace temperature is possible at powers of up to several thousand kVA. The tubes can moreover be employed by commercial electricity undertakings, as a high power switching source for controlling h.v. circuit breakers during power distribution switching operations. Their inertialess characteristics make them ideally suited for this purpose, especially when rapid switching of high-speed d.c. breakers is involved.

In the production of permanent magnets intended for use in microwave tubes and specialized industrial applications, magnetizing methods employing conventional switches have proved to be generally unsatisfactory. This has led to the development of impulse magnetizing equipment using ignitrons as the impulse initiator, which has enabled magnetization of magnets of various special shapes to be carried out.

A system for three-phase motor control using ignitrons has been devised for controlling a.c. motor-driven industrial draw presses. In this application a pair of anti-parallel connected tubes in each phase acts as a contactor which closes the motor drive circuit for each operating cycle. By slightly altering the instant at which the tubes are fired, accurate control of the various press operations can be achieved to within very fine limits.

The use of ignitrons has also extended into the field of purification of public water supplies. Local and regional authorities faced with the serious problem of providing sufficient pure water to meet the needs of both the domestic consumer and industry (further complicated by the inadequacy and costliness of space-consuming chemical filtration plant), have found that ignitron-controlled water electrolysing systems satisfy their highest demand requirements. Another application for ignitrons based on the principle of electrolysis, is in the production of electrical components. Here rectifier tubes can provide the constant values of d.c. voltage necessary for dielectric forming, in the manufacture of dry electrolytic capacitors.

A rather unusual application for these tubes is in fish migration control, where an underwater electric fence sequentially pulsed by ignitrons has proved to be an ideal method of guiding migrating salmon and other fish subject to controlled breeding, away from hydroelectric turbines into staircases or traps. By circumventing the obstruction the fish can safely swim to their breeding grounds and when traps are used, they can be transported *en masse* to their intended destination. The electric fence technique has also been employed off bathing beaches for the protection of bathers against marauding sharks.

Other applications for these versatile tubes are found in electrophoresis of dispersed solutions, the heat treatment of alloy steels and non-ferrous metals and the sintering of materials such as molybdenum and tungsten. In the heat treatment and sintering processes, heavy current pulses of pre-determined magnitude are passed through the workpiece to heat the material to its required hardening or sintering temperature.

Large numbers of ignitrons are also employed in scientific research activities devoted to the study of matter, which involve cryogenics and attempts to artificially simulate and control nuclear fusion reactions. The tubes switch the very heavy current pulse discharges from large capacitor banks, used to generate the strong magnetic fields and high temperature gas discharges, which are required in experiments employing particle accelerators or stellarator apparatus.

A comprehensive range of ignitrons suitable for the various applications outlined in the foregoing is available. The tubes have each been subjected to exhaustive testing and quality control which has yielded a high reliability and average life expectancy per tube — a vital factor — in excess of 4 years. The tubes included in the range all feature an igniter electrode of new and unique design, having improved electrical characteristics which contribute significantly to extending the tubes' normal lifespan under different operating conditions. Most ignitron types within the range can be operated with constant flow control of the cooling water, which improves water economy and affords protection of the tubes and equipment against the effects of overheating.

All tubes have been effectively vacuum sealed by seam welding during manufacture and thoroughly power-tested. The entire manufacturing process, close inspection and elaborate post-production tests have been aimed at producing a tube that will provide reliable, faultless service on countless occasions under various demand requirements. The maker would be glad to deal with any enquiries concerning the applications of these tubes, and will readily supply on request any pertinent information not covered in this book.

2 General

The ignitrons included in the most recent range incorporate several new and important design features, which contribute greatly to extending the life of the tube. They are moreover, relatively compact, being up to 5 cm shorter in length than earlier types. All the tubes in the latest range include the re-designed igniter and an associated screened connection as standard items, which reduce the ignition voltage required and extend tube life. Another important feature of the new tube series is the inclusion of an internal gettering device, which counteracts the effects of freed gas in stored tubes or those which have been out of service for a lengthy period.

Connection of the cooling water system to the tubes is simplified by a universal nipple on the inlet and outlet water pipes of the tube jackets, which enables the water hoses to be quickly and easily fitted. Since this type of water connection is common to all models in the existing range, the replacement of tubes in a given installation is considerably simplified.

The water cooling jackets of the new tubes are coated with plastic, so that water condensation on the jackets under conditions of high humidity and low cooling water temperature, is considerably reduced. The plastic coating also affords a measure of protection against accidental contact with the tube surface whilst the power is on (see cautionary note ch. 5 sect. 5.3.2). The coating is capable of withstanding some 3 kV.

In the past it was customary to use thyratrons for ignitron control, however, with the rapid advances made in semiconductor technology in recent years and the introduction of the thyristor (silicon controlled rectifier) with its manifold advantages over the thyratron, preference is now given to this device as the ignition control element in new concepts where ignitrons are employed. It will be useful to draw a brief comparison between thyratrons and thyristors, so that the relative merits of the latter may be more clearly understood.

One of the most important advantages of the thyristor over the thyratron in ignitron applications is its robustness and long lifespan, which leads to considerably reduced maintenance and cost. Moreover, with the perfection of modern mass production techniques in the semiconductor industry, the initial cost of devices such as thyristors has also become cheaper.

The use of thyristors results in simplification of ignition circuits since the need for separate heater supplies is eliminated and cooling requirements are minimized, thus permitting the design of control circuits of more compact size; furthermore, the devices require no warm-up period.

The significant advantages offered by thyristors thus make them attractive for use as control elements in ignitron applications. However, it should be remembered that although thyristors serve the same purpose as thyratrons, *their characteristics differ in many respects so that ignition circuits need to be designed accordingly*. In modern practice, particularly in welding applications, the ignition circuits form an integral part of the timing system which is normally designed to meet the requirements of the individual customer, e.g. a particular type of welding programme.

3 Operating Principles

3.1 General Description

3.1.1 Mechanical Construction

The ignitron (Fig. 3-1*a*) is a special type of gas discharge tube used where

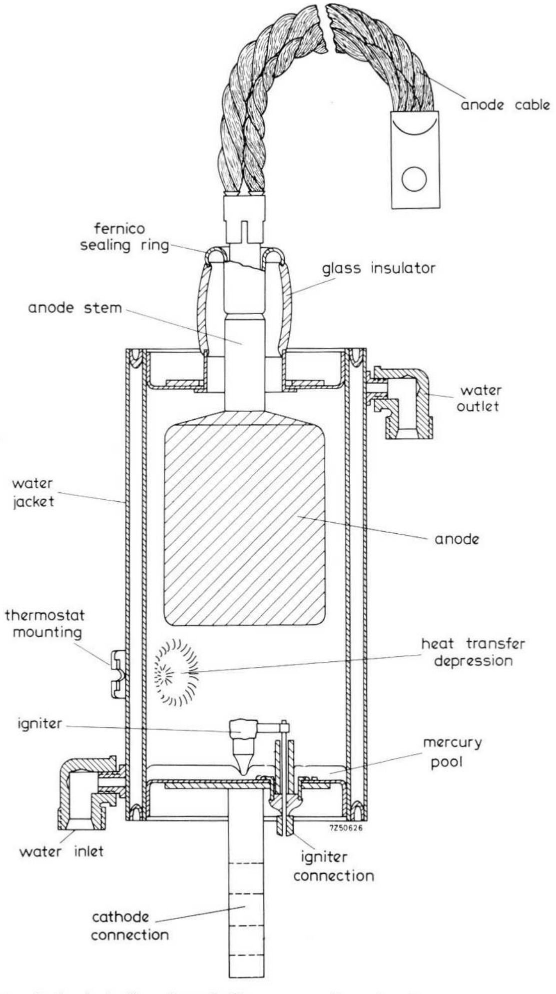

Fig. 3-1. (a) Sectional diagram of an ignitron.

the control or rectification of heavy currents is required. Fig. 3-1*b* illustrates the electrode assembly which consists of the anode (*a*), a mercury pool container or cathode (*k*), and the ignition electrode or igniter (*ign*). The electrodes are housed in an evacuated stainless steel envelope which has double walls to permit the circulation of coolant.

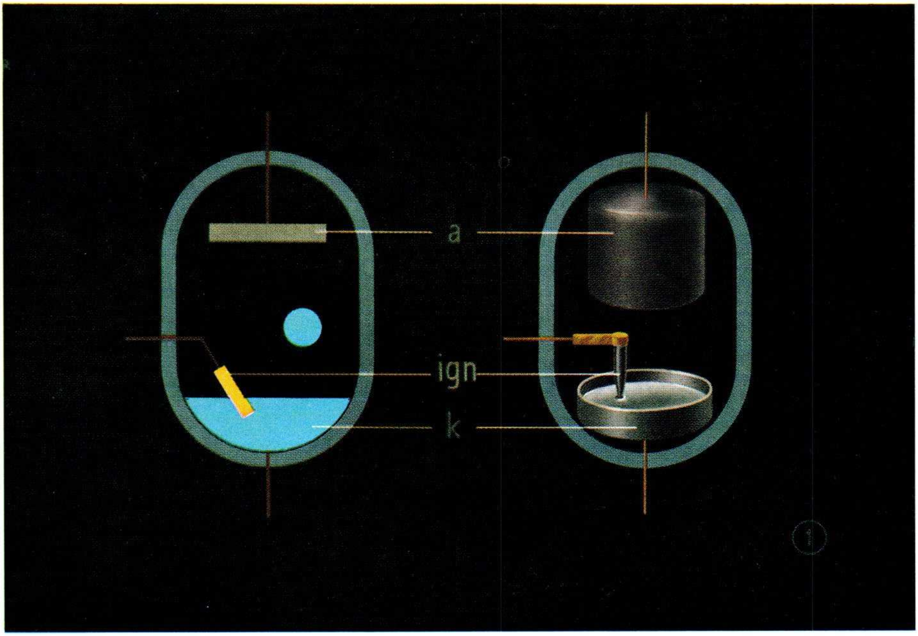

Fig. 3-1. (b) Ignitron electrode assembly and equivalent symbol.

Since the cathode of an ignitron is an open mercury pool, the internal gas pressure is the saturated vapour pressure within the tube under dynamic conditions. The vapour pressure is directly related to the mercury temperature and it is this factor which determines the operating conditions of the tube i.e., permissible temperature limits and cooling requirements.

The igniter consists of a small rod of refractory material such as boron-carbide which is slightly tapered, the narrow end projecting into the cathode mercury pool. Because of the effect of surface tension the igniter is not "wetted" by the mercury, a meniscus being formed around its tip (Fig. 3-2). The anode assembly is insulated from the steel envelope by a glass-to-metal seal at the top of the tube, which forms a gland through which the stem of the anode extends; connection to the igniter is made through a similar seal at the tube base. The metal bar cathode connection is welded to the underside of the mercury pool container which forms the base of the tube. Because the cathode container is in physical contact with the steel water jacket, when the tube is in operation the whole of the jacket carries cathode potential. The anode lead and metal cathode connections are of large cross-section since they are required to pass very heavy currents. The outlet and inlet for the cooling water is provided by two small, right-angled brass pipes, located respectively at the top and bottom side exterior of the water jacket. With most types a metal plate is provided, mounted on the water jacket, which accommodates a protection thermostat (ref. ch. 5 sect. 5.3.1).

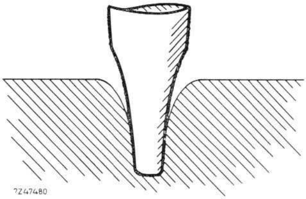

Fig. 3-2. Position of igniter tip with respect to cathode mercury pool.

3.1.2 Functioning

With ignitron tubes emission occurs from the mercury pool, the arc discharge being struck and quenched every cycle, unlike an electrically heated cathode which emits continuously; however the operation of the tube follows a pattern closely similar to that of other gas-filled tubes. To fire an ignitron a current pulse of short duration must flow through the igniter, simultaneously with a positive voltage excursion of the anode; the main arc discharge will then be initiated. Let us now examine the operation of this type of tube in greater detail.

Assuming that the ignitron is connected across a 220 V, 50 Hz mains supply and provisions have been made for accurate control of the tube so that firing (ignition) occurs at the correct instant. When a sufficiently high positive trigger pulse (150-220 V) is applied to the igniter, a high electrical field strength is developed in the gap between the igniter tip and the mercury (in the order of 10^5 V/cm), collision ionization occurring as a result of the liberated electrons interacting with the ions of mercury vapour (Fig. 3-3). The ions produced travel to the mercury pool to sustain the field emission. A current of about 10 A flows momentarily, producing a small arc in the area between the igniter and the mercury. Once current has started to flow across the igniter-cathode gap, the arc gradually spreads over the whole igniter (Fig. 3-4*a*) as the vapour pressure increases due to the increase in local mercury temperature. The shorter the current rise time, the closer the high temperature area will be confined to the vicinity of the current path where the high vapour pressure is required.

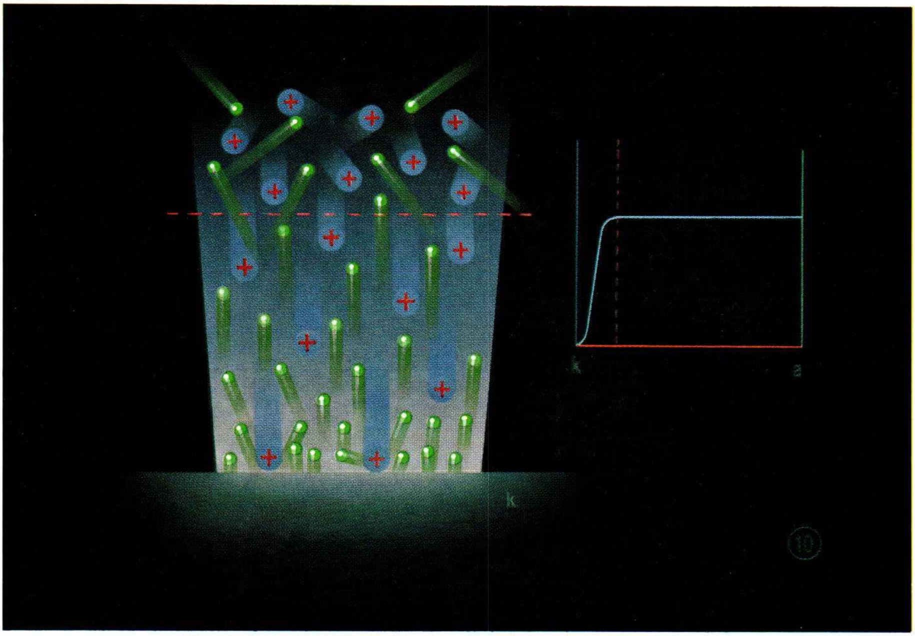

Fig. 3-3. Collision ionization in an ignitron.

When the gas in the area of the arc is adequately ionized and the anode has risen during its positive voltage excursion, to a level sufficiently positive with respect to the mercury pool, the main discharge to the anode occurs from a small cathode "hot spot" formed on the surface of the mercury (Fig. 3-4*b*). The action occurs cumulatively, the main discharge being rapidly augmented by the development of several other cathode spots (Fig. 3-4*c*). The discharge will continue as long as the anode voltage exceeds the arc voltage (12 to 18 V) and the anode current is of a

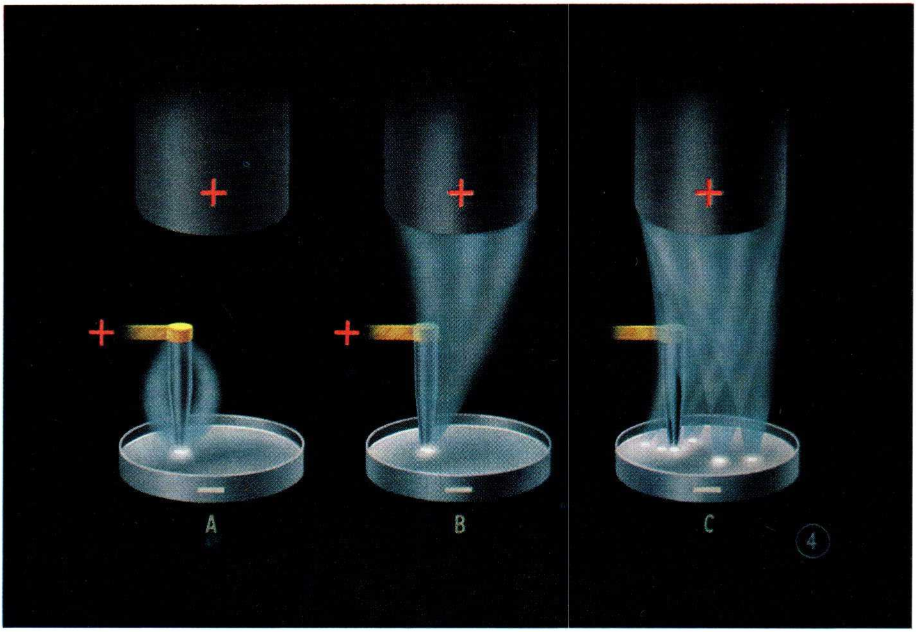

Fig. 3-4. (a), (b), (c). Development of the mercury arc in an ignitron.

magnitude above the critical value. The igniter has during the period of the arc discharge, no further control over the operation of the tube. Control is regained only when the anode voltage falls during its negative excursion to a level insufficient to maintain the arc, causing the latter to be quenched.

Since ignitrons pass no current unless ignited, two tubes connected in anti-parallel configuration (sect. 3.1.4.) can serve as a single-pole contactor simply by controlling their ignition; a circuit of this type is capable of continuous or semi-continuous handling of large amounts of power. Ignitrons are thus rated in terms of the apparent power in kVA which two tubes connected in anti-parallel can deliver, at applied mains voltages in the range 250 to 600 V rms. The kVA ratings (P) indicate the maximum power the tubes can handle at low duty cycles such as are met in resistance welding. Under these operating conditions a strong current flows during the short conducting time, the mean average value of which is relatively low compared to the peak value.

3.1.3 Ignitron Types

A number of ignitron models of the type described in sect. 3.1.1 are available for use in a.c. control applications. Each version differs in its demand power and maximum current handling capability. These tubes can be employed for example, in various types of resistance welding equipment where high peak currents of up to 13.6 kA at relatively low voltages can be expected.

Special ignitrons have been designed for continuous high power rectification, where operating requirements are far more stringent than those normally met in a.c. control applications. In resistance welding the ignitrons are required to handle high intensity current surges of short duration, at voltages in the region of 250-600 V. In high power rectification however, the tubes must be capable of withstanding high average currents at anode voltages around 2.4 kV. At such high voltages there is a considerable risk of arc-back during the negative half-cycle, since a large quantity of ions

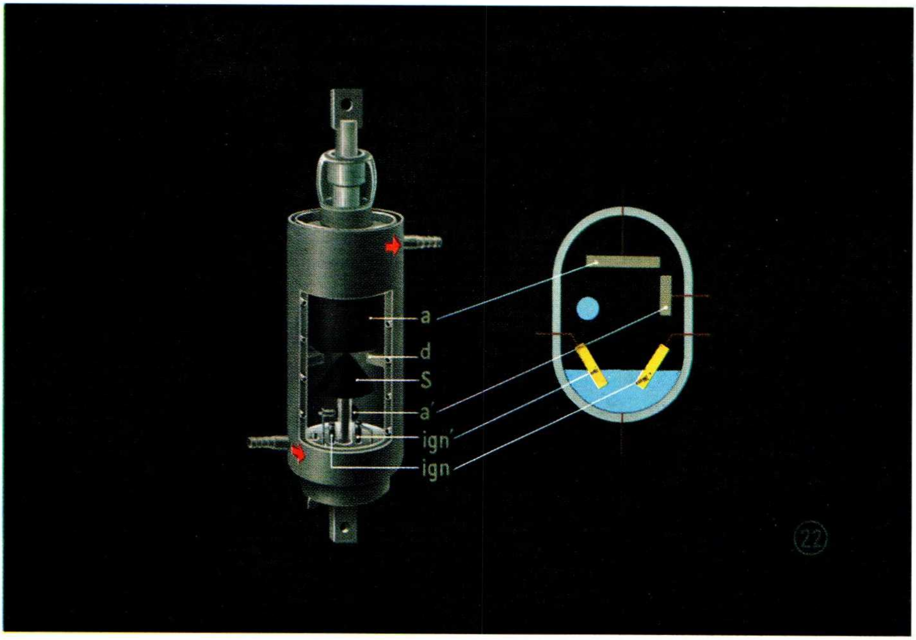

Fig. 3-5. Rectifier ignitron and equivalent symbol.

is still present in the discharge path. In the absence of adequate precautions against this eventuality there is a risk of the supply transformer being short-circuited. The rectifier ignitrons thus include such features as a de-ionizing ring which increases the effective internal wall area on which the ions recombine, and an anti-splash screen which isolates the mercury from the anode. The tubes are also fitted with an auxiliary anode operated at a potential lower than that of the main anode, the purpose of which is to maintain the main arc discharge when the applied voltage falls below a certain critical value owing for example, to the presence of a back-e.m.f. The latter occurs when the load is inductive and susceptible to voltage variations e.g., d.c. motor windings.

In three-phase rectifying systems the auxiliary anode keeps the tubes in the conducting state through a period corresponding to 120° of each cycle. The rectifier ignitrons are also provided with a reserve igniter; a typical rectifier tube is illustrated in Fig. 3-5. To give an example of the usefulness of these types of ignitrons, it is possible with six tubes connected in a double-star configuration to obtain d.c. power outputs of 300 kW at 300 V, or 500 kW at voltages in the range 600 to 900 V d.c.

3.1.4 Anti-Parallel Circuit Configuration

When ignitrons are used for controlling a.c. circuits, two tubes are required connected in anti-parallel configuration. Each ignitron behaves as a rectifier, conventional current flowing unidirectionally from anode to cathode.

Fig. 3-6 shows a simplified arrangement which performs the same function as an a.c. electromagnetic contactor, having the advantages of no moving parts and being substantially inertialess.

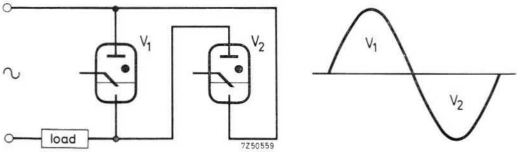

Fig. 3-6. Anti-parallel circuit configuration.

A basic form of anti-parallel circuit is shown in Figs. 3-7*a*, *b* and *c*, which is reproduced in three separate conditions to give a clearer understanding of the circuit functioning. In each circuit it can be seen that the anode of V_1 is connected to the cathode of V_2 and vice-versa. The ignitrons are interconnected via diodes which protect the igniters from damage by preventing them becoming negative with respect to their cathodes.

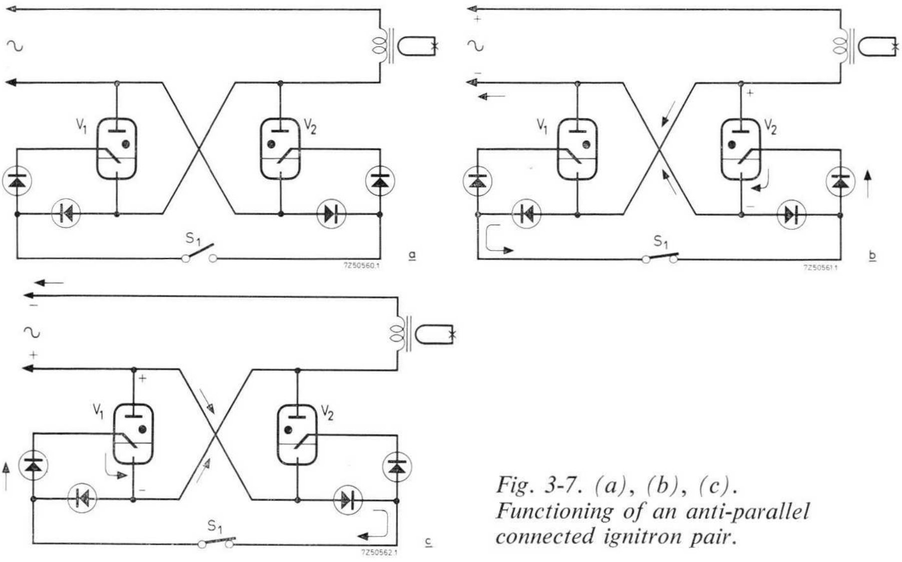

Fig. 3-7. (a), (b), (c). Functioning of an anti-parallel connected ignitron pair.

In each illustration the dotted arrows indicate the direction of conventional current flow through the tubes during alternate mains half-cycles. Fig. 3-7*a* shows the ignitrons in their quiescent state; with S_1 open the ignition circuit is broken and no current flows between the igniters and mercury pool cathodes. With S_1 closed the igniter fires the tube whose anode is positive during a given mains cycle; this is V_2 in Fig. 3-7*b* and V_1 in Fig. 3-7*c*. Once an ignitron is ignited the arc is taken over by its anode and the particular igniter becomes inoperative until the next half-cycle. An a.c. flows through the load whose magnitude is determined by the load impedance, the voltage drop across the conducting tube being only a small percentage of the alternating supply voltage.

Other configurations are possible for these tubes in applications such as three-phase power rectification where a double-star connection is used, or when pulse-operated as in switch closing when a full-wave rectifier arrangement is often employed. These and other special configurations are dealt with fully in the appropriate sections of the chapter devoted to applications.

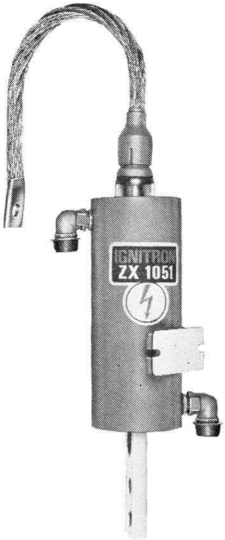

Fig. 3-8. Type ZX1051 ignitron (replaces former type PL5551-A).

3.1.5 Survey of Tube Parameters

The demand versus duty cycle graphs of three different pairs of anti-parallel connected ignitrons at various supply voltages, are given in Figs. 3-9*a*, *b* and *c*. In each graph the duty cycle percentage, i.e. the ratio of the period during which current flows (conduction time) to the complete operating period (repetition time), expressed as a percentage, is plotted along the x axis whilst the r.m.s. value of demand current is drawn on the y axis. The maximum averaging time of current flow t_{av}, determined by the heating capacity of the particular ignitron, is also given for each tube and working condition.

If for example, a very strong demand current is required for 1 s followed by a 4 s pause (a 20% duty cycle), the amount of heat generated in the tube does not affect its operation since the heat is dissipated during the 4 s "off time". However, should the ignitron be required to pass current for a period of 20 s followed by an interval of 80 s, the maximum averaging time of current flow is exceeded and the limiting duty cycle no longer applies. This would result in a transitory inadmissible increase in mercury vapour temperature but not, however, in a temporary overall rise in the temperature of the tube.

When the duration of current flow exceeds the rated value of t_{av}, the abscissa of 100% must be taken as the maximum permissible operating condition. If conversely, the conduction time is shorter than t_{av} but the corresponding repetition time exceeds t_{av}, the duty cycle is given by the ratio of the time of current flow to the maximum average time of the operating period.

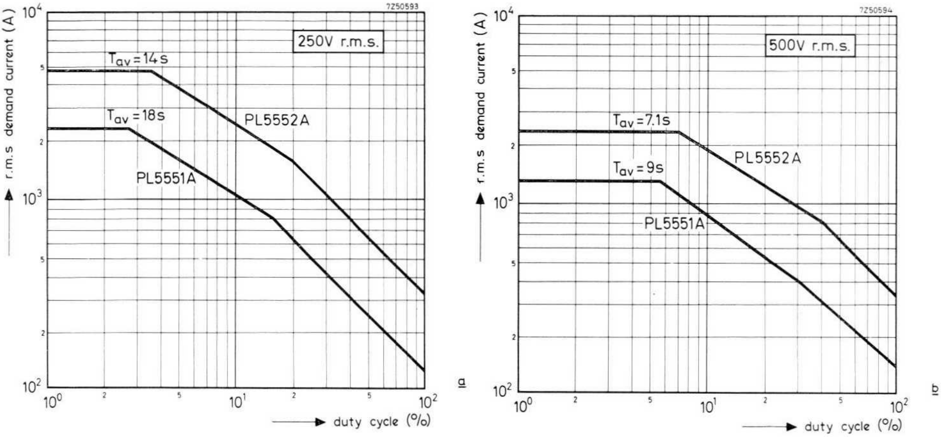

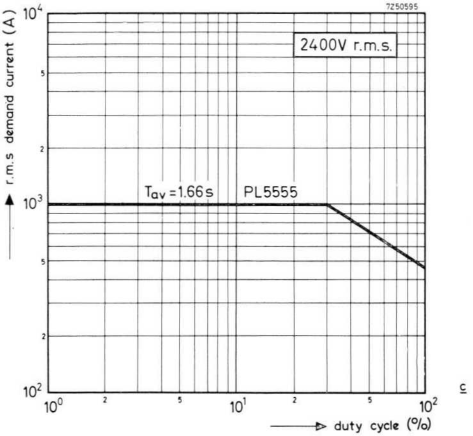

Fig. 3-9. (a), (b), (c).
Maximum current ratings of anti-parallel connected ignitrons and percentage duty cycle for three types of tubes at different supply voltages.

A detailed, qualitative treatment of the tube operating parameters is given in ch. 7.

3.2 Firing of Ignitrons [1]

3.2.1 Conditions for Reliable Firing

To lead to a clear understanding of the ignition process and the essential requirements for reliable firing under various operating conditions, the subject will now be examined more closely. Fig. 3-10 shows a typical ignition current characteristic of an ignitron, where the time t required for firing is plotted against igniter current I_{ig} and the shaded area represents the region where ignition is ensured. The slope of the line representing rate of rise of current $\mathrm{d}i/\mathrm{d}t$ must be steep enough so that the line intersects the hyperbola to the left of its minimum.

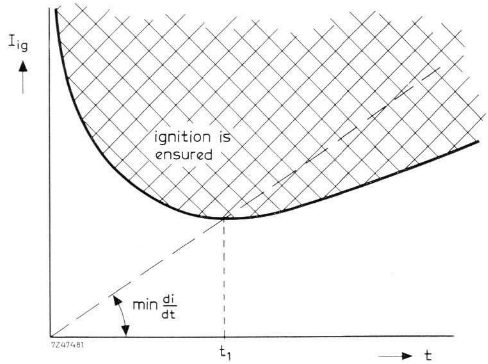

Fig. 3-10. Typical ignition current characteristic of an ignitron.

If the slope is less than that of the right-hand part of the curve the ignitron will not fire, irrespective of the value of igniter current. The vapour pressure will have then risen excessively before a sufficient field strength suitable for ignition has been built up; the discharge is thus quenched by the vapour and can no longer be maintained. Conversely, if the rise time is too short, insufficient time is allowed for the development of the vapour pressure. The pressure being too low, augmentation of the discharge is insufficient and since the energy losses are high, more electrons need to be liberated from the mercury to make up the deficiency. In order to fire the tube under these conditions the value of anode voltage would need to be very high to produce the necessary field strength, which is rather wasteful. A further disadvantage arising from a too rapid rise time is electron erosion of the igniter, which tends to shorten its useful life.

The ignition energy E_{ig} necessary to fire the tube is also dependent on the ignition delay as shown in Fig. 3-11; the shaded area again represents the region where ignition is ensured. In practice the minimum of the current characteristic (t_1 in Fig. 3-10) does not coincide with the region where the energy is smallest. A choice must therefore be made in the design of the ignition circuit, between a system in which the ignition *current* or *energy* is a minimum.

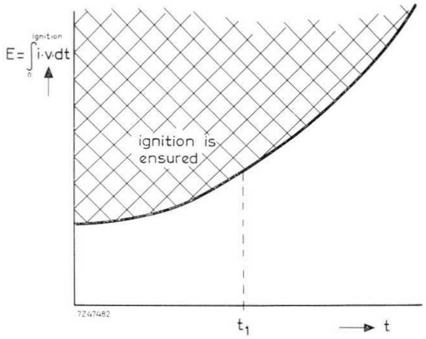

Fig. 3-11. Typical ignition energy characteristic of an ignitron.

Summary of Requirements:

- For reliable firing of an ignitron the ignition circuit must be capable of delivering a current and voltage pulse of the required value and at the correct instant to the igniter, which must be repeated every cycle. The duration of current flow must not be too short otherwise insufficient ionisation would be produced to create the necessary build-up in vapour pressure.
- The igniter should never be allowed to draw a negative current otherwise it will be permanently damaged; this is prevented by including a rectifying element in the ignition circuit.
- The connection between the igniter and ignition circuit should be made with screened leads, to guard against any man-made interference in the vicinity.

The required igniter current and voltage for reliable firing of a particular tube may be found in the last chapter (ch. 8); the absolute maximum limiting values are quoted (ref. ch. 7, sect. 7.5.2).

3.2.2 Ignition Circuit Types

Two types of ignition circuit are commonly used: (*a*) the self- or anode-excited type, normally employed in single-phase a.c. control e.g., single-phase resistance welding, and (*b*) the separately-excited circuit which is often used in three-phase frequency changer a.c. control, rectification and capacitor discharge applications. With the self-excited type the ignition energy is derived from the anode circuit of the ignitron to be fired. In single-phase welding systems using self-excitation, enough energy is locally available to fire the tube because the ignition circuit is connected directly to the mains. This satisfactorily overcomes problems created by the inductive load, which presents a high impedance to an increasing current and restricts its rapid growth. The need for an auxiliary energy source is thus avoided since reliable firing is ensured. A disadvantage of this method however, is that the choice of the instant of ignition and hence the phase control angle (ref. sect. 3.4) is somewhat restricted, since the value of igniter voltage is directly related to that applied to the anode and must reach a certain minimum value ($\approx$ 150 V) before the tube can be fired.

In separately-excited systems on the other hand, the ignition control circuit is quite independent of the value of anode voltage; it can therefore function satisfactorily at comparatively low anode supply voltages, thus enabling the phase control angle to be varied over a wider range. A further advantage of separate excitation is that operation of the control elements (thyristors or thyratrons) is not affected by voltage transients or other phenomena, which may occur in the anode circuit of the tube. One drawback of this type of ignition circuit however, is that because of the need for auxiliary supplies it is less economical.

Ignition Control Element

In modern practice the thyratron has gradually given way to the thyristor as a reliable control element in ignition circuits (see ch. 2). To familiarize the reader with the potential of these devices in this field and the latest design trends in ignitron applications, the ignition circuits discussed in the ensuing paragraphs feature thyristors as the basic circuit element. This pattern has been followed as far as possible in the chapter dealing with the actual applications of ignitron tubes.

3.2.3 Self-Excitation

With the self-excited type of ignition circuit the igniter is connected to the anode of the ignitron via a control device, comprising rectifying and current limiting elements. Figs. 3-12*a* and *b* show two basic self-excited circuits incorporating a number of thyristors and semiconductor diodes as the control elements. Since the ignition and anode circuits are linked, the anode will automatically take over the igniter discharge with certainty, provided the current rise time conforms with that prescribed to ensure reliable ignition.

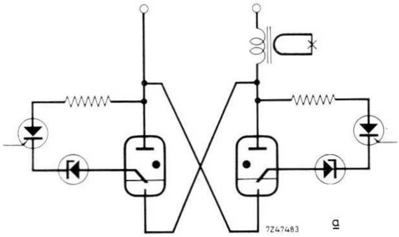

Fig. 3-12.
(a) Basic self-excited ignition circuit using two thyristors;

(b) Self-excited ignition circuit employing a single thyristor.

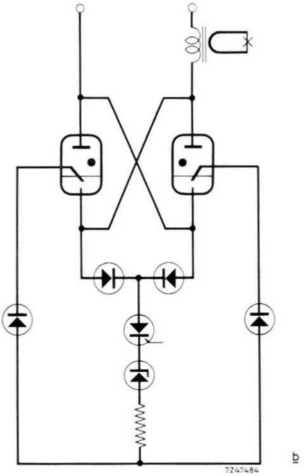

In the diagrams a voltage regulating (Zener) diode is connected in series with each thyristor. This is necessary to ensure a constant voltage drop across each ignition circuit when the associated ignitron is fired. Since the voltage drop across a thyristor once triggered into its high conduction region is much smaller than the ignitron arc voltage, in the absence of some means of protection an excessive current would continue to flow through the thyristor during the conduction period of the ignitron, with resulting loss of control and possible damage to the device. The voltage regulating diode ensures that the voltage drop across the ignition circuit exceeds the ignitron anode-cathode arc voltage, thus cutting off the thyristor when the ignitron conducts.

In both circuits the thyristors must be capable of withstanding the peak value of the line voltage, including any superimposed transients. By using controlled avalanche thyristors and associated diodes, a high degree of transient suppression can be obtained. To facilitate the use of low-voltage thyristors, the circuit of Fig. 3-12*b* can be modified by the addition of a step-down transformer in the ignition circuit, or by connecting a number of thyristors in series.

Alternative Self-Excited Ignition Circuits

Four alternative basic circuits are shown in Figs. 3-13*a*, *b*, *c* and *d*, in which the anti-parallel connected ignitron pairs are controlled by a single thyristor. Each of these circuits includes a step-down transformer; in drawings *c* and *d* a step-up transformer is also employed. When ignitrons of the *ZX* series are used, which require a minimum ignition voltage of 150 V for reliable firing, the step-up transformer can often be omitted.

The choice of a suitable circuit from these for a particular application depends on four factors, namely:

— the value of line voltage together with the incident transients likely to be encountered.

— the maximum permissible voltage across the thyristor, including any transients.

— the required phase control angle.

— the minimum igniter voltage required for reliable firing.

In Fig. 3-13*a* if V_{th} denotes the voltage across the thyristor and voltage regulating diode control elements, V_{ig} the igniter voltage and V_a the anode supply voltage, it can be written:

$$V_{th} = \tfrac{1}{2}V_a = V_{ig}.$$

For the circuit of *b*, where $n = (t_1 + t_2)/(t_1 + 2t_2)$:

$$V_{th} = nV_a = V_{ig}.$$

In *c*:

$$V_{th} = \tfrac{1}{2}V_a = \tfrac{1}{2}V_{ig},$$

and for *d*, where $n' = 2t_1/(2t_1 + t_2)$:

$$V_{th} = \tfrac{1}{2}V_a = \tfrac{1}{2}n'V_{ig}.$$

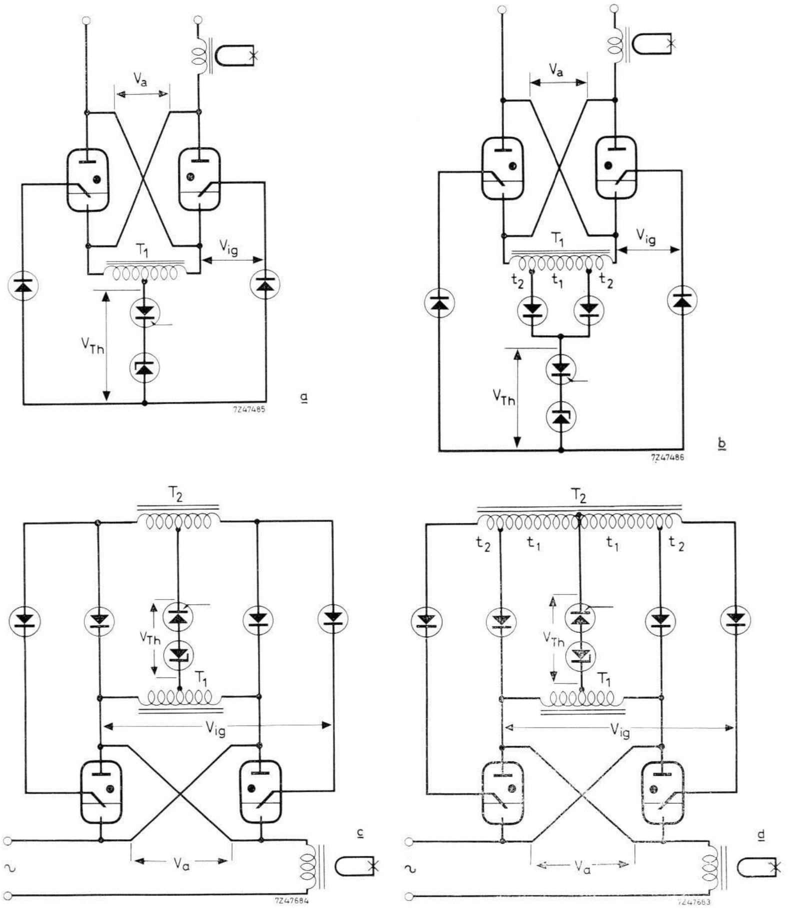

Fig. 3-13. (a), (b), (c), (d). Typical self-excited ignition circuits incorporating a low voltage thyristor and voltage adjusting transformers.

To ensure a short delay time between switching of the thyristor and the instant when the ignitron anode takes over the arc discharge, the rate of rise of ignition current must be sufficiently high. Since the rise time is governed largely by the load impedance, the rate of rise may be too slow for ensured firing. If the load is highly inductive care must therefore be taken in the design of the circuits shown in Fig. 3-13, to ensure that the inclusion of transformer T_1 (and T_2 if incorporated) does not unduly increase the circuit impedance.

A practical self-excited circuit is given in Fig. 3-14*a*. In this example to allow for circuit losses, the instantaneous value of mains voltage for ensured firing must be at least 240 V, the igniter would not otherwise reach the required ignition potential of 150 V. The requirements for the circuit semiconductors are listed in the table; the construction of the transformers is shown in Fig. 3-14*b*.

(a)

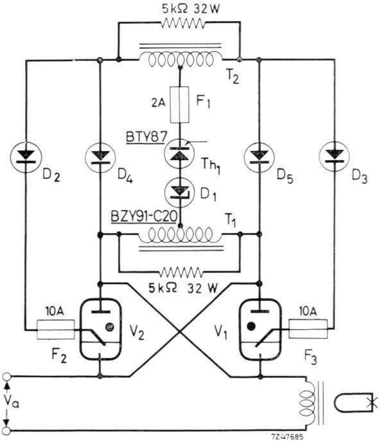

Fig. 3-14. (a)
Practical self-excited ignition circuit.

component	Th_1	D_1	D_2,D_3	D_4,D_5	V,I
repetitive peak reverse voltage:	$\sqrt{\frac{1}{2}}V_a$		V_a	V_a	
repetitive peak forward current:	24		12	24	A
average forward current:	240		60	120	mA
reverse breakdown voltage:		20			V
repetitive peak reverse current:		24			A
average reverse current:		240			mA

Autotransformers T_1 and T_2 should differ as little as possible and they should be exactly centre-tapped. Their resistance should be as low as possible ($R < 2\ \Omega$) and their stray inductance should be minimal ($\omega L_s < 0.6\ \Omega$ under short-circuit conditions). The impedance Z should exceed 2.5 kΩ at $V_a = 400$ V.

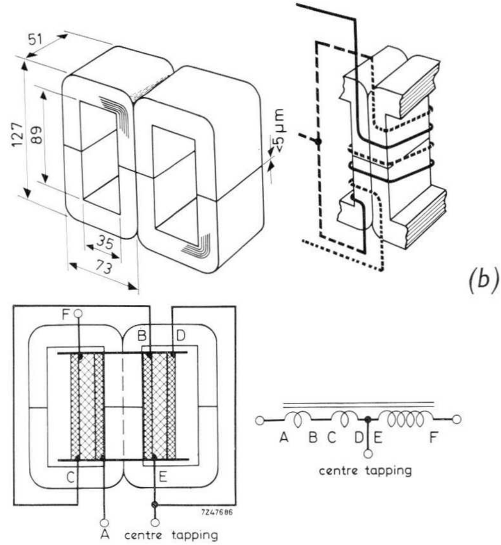

Fig. 3-14. (b) Recommended construction of transformers.

Two double-C cores with a cross-sectional area of 9650 mm^2 are used; their air gap should be less than 5 μm. The magnetic flux length is 303 mm and the iron weight is 2.1 kg per core. The maximum flux density is 1.75 V.s/m^2 (17 500 Gs) and the quoted power 255 VA at 50 Hz.

The windings, which surround the adjoined legs, consist of 1.4 mm enamelled copper wire. Winding *AD* is split into two halves: *AB* and *CD*, with winding *EF* sandwiched in between.

Limitations of Self-Excitation Method

When the anode supply voltage at the required phase control angle is relatively low, or the rate of current rise in the main circuit is insufficient to ensure reliable firing owing to a highly inductive load, recourse can be had to the separately-excited type of ignition circuit. By way of example to illustrate the second condition mentioned above, and to demonstrate the limitations of the self-excitation method, let us consider a 30 kVA installation having a power factor of 0.4 ($\cos \phi$) and supplied by 220 V, 50 Hz mains. Assuming that the voltage drop across the ignition circuit and load does not exceed 85 V, with a 180° demand cycle the tubes are fired at phase angle ϕ, when the instantaneous value of mains voltage is $220\sqrt{2} \sin \phi = 285$ V, which is sufficient to provide the 150 V minimum ignition voltage for the igniter.

With the value of a.c. through the anti-parallel connected tubes at $30\times10^3/220 = 136$ A rms, assuming this current to be sinusoidal and neglecting the resistance of the ignition circuit, the rate of rise of igniter current:

$$\mathrm{d}i/\mathrm{d}t = 136\sqrt{2}.2\pi 50\ \cos\omega t = 6.1\times10^4 \cos\omega t.$$

The rise of current through the igniter in the first 100 μs is virtually linear and will reach an approximate value of 6.1 A. This rate of rise is unsatisfactory however, since a typical ignitron specification calls for an igniter current of 12 A within 100 μs to ensure reliable ignition at the correct instant. The problem may be resolved by connecting a suitable resistor across the primary of the load transformer, however a much better solution is offered by using the separate excitation method.

3.2.4 Separate Excitation

In this method an auxiliary energy source is fed to the igniter at the desired instant to initiate the igniter-cathode discharge and subsequently the main discharge. The minimum value of anode voltage at which the tube will fire with this type of ignition circuit is considerably lower than with self-excitation, being about 30 to 40 V provided the main ignitron current is at least 10 A at this voltage.

The most advantageous feature of this mode of operation is that the ignition energy and current waveform are completely independent of the ignitron anode circuit parameters, thus giving greater freedom of design by enabling the ignition circuit to be devised to give optimum performance. Since this type of circuit is not subject to transients, operating requirements are simplified and are more easily accomplished than with self-excitation. The voltage supplied to the ignition circuit can be accurately pre-determined and independently controlled and, as it is free of transients, there is no risk of the voltage across the thyristor becoming excessive. Moreover, there is no requirement for a voltage regulating diode since in this configuration the thyristor is not shunted across the main discharge.

In designing a circuit of this type it is nevertheless desirable to keep the amount of required ignition energy at a minimum, economical level consistent with reliable firing. Furthermore, because of the inherent delay between the establishment of the tube igniter-cathode auxiliary discharge and the commencement of the main discharge to the anode, adequate provision has to be made to minimise the risk of omissions. This is effected by arranging the ignition circuit so that the duration of the igniter auxiliary discharge is prolonged (> 200 µs) sufficiently to allow time for the main current to reach a value of around 10 to 12 A, whence the discharge is safely taken over by the anode. Fig. 3-15*a* shows a conventional method employing a simple series resonant *LC* combination in conjunction with a thyristor control device, which supplies a single current pulse to the igniter. Since a 180° phase difference in voltage exists between the ignition circuit and the ignitron anode, C_1 is given sufficient time to recharge during the negative half-cycle of anode voltage, when the tube is non-conductive.

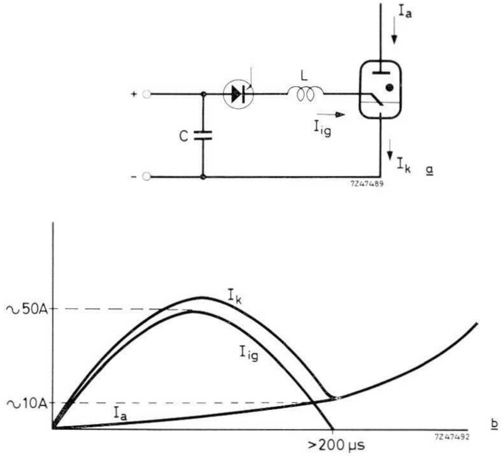

Fig. 3-15. (a) Simple LC separately-excited ignition circuit; (b) Fall of igniter current with time.

In the interests of economy it is desirable that the firing pulses produced by the circuit have a steep leading edge, thus reducing the amount of energy required. However, one difficulty encountered with this circuit is that of obtaining satisfactory reliability of the anode takeover. In practice, the *LC* combination produces what are essentially sinusoidal half-cycles, and a too rapid rate of current rise would result in the pulse duration being too brief to ensure that the anode can take over. Notwithstanding the selection of a large value for C_1, the igniter current falls away rapidly before the anode has properly taken over the discharge, causing the arc to become unstable and liable to break off (ref. Fig. 3-15*b*).

A practical solution to these problems is provided by the circuit of Fig. 3-16*a* which eliminates the difficulties inherent in the preceding, conventional method. In this circuit — termed the escapement circuit — the choice of a low value for L_1 (100 μH) permits a high rate of rise of igniter current, which results in a short ignition delay and low energy consumption. When C_1 is fully discharged and the thyristor has reverted to its non-conducting, forward blocking state, the energy stored in the inductor is returned to the circuit by the collapsing magnetic field, and "escapes" via diode D_1 into the ignitron igniter-cathode gap to sustain the flow of current through the igniter.

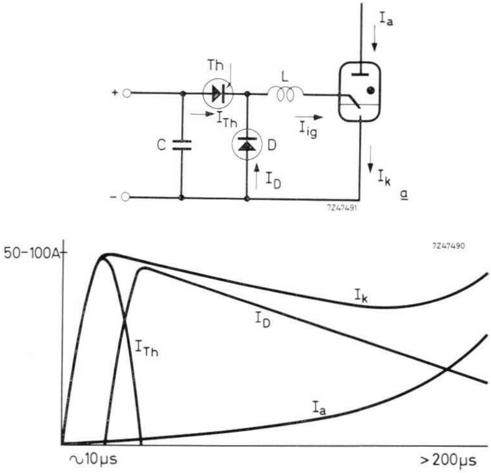

Fig. 3-16. (a) Separately-excited ignition circuit based on the escapement principle; (b) Ignition current pulse from escapement circuit.

Reference to Fig. 3-16*b* shows that the pulse obtained has a steep leading edge but a long trailing edge of exponential slope. The lower the resistance of the circuit formed by L_1, D_1 and the igniter, the longer the slope and thus the decay time of igniter current. The circuit therefore adequately fulfils the requirement for reliable, economic firing, and also avoids the possibility of omissions by prolonging the igniter discharge time and decreasing the rate of fall of current.

If the required ignition energy in the circuit of Fig. 3-16*a* is to be kept to a minimum and the shortest possible ignition delay obtained, it is imperative that the voltage supplied to the ignition circuit be at least

600 V to achieve a sufficiently high igniter field strength. Should the available supply be lower than this value, owing to the non-linear relationship between voltage and ignition energy a compensating increase must be made in the value of the storage capacitor C_1. At 650 V a 2 μF capacitor minimises the risk of omissions, whilst with a supply of 400 V the value of C_1 must be about 8 μF to obtain the same small omission probability.

A pair of more practical separately-excited ignition circuits are shown in Figs 3-17*a* and *b*, suitable for an application such as resistance welding where high reliability is required. The inclusion of auto-transformer T_1 in each circuit facilitates the use of low-voltage thyristors; an isolating, step-up transformer can alternatively be used, thus enabling the primary side of the ignition circuit to be earthed. Provided the transformers' stray inductance and short-circuit resistance is small, the operation of each circuit is identical to that of Fig. 3-16*a*.

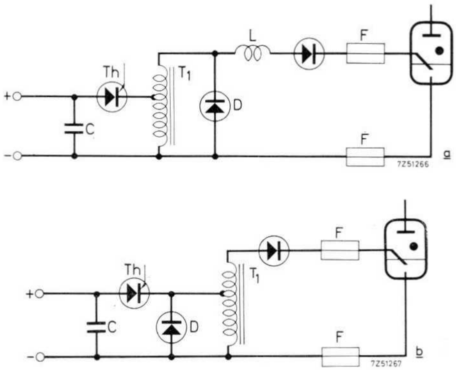

Fig. 3-17. (a), (b). Practical separately-excited ignition circuits.

The circuit of Fig. 3-17*b* differs from that of Fig. 3-17*a* by the omission of the separate 100 μH inductor *L*; this is because the transformer of the second example is designed to have a measured stray inductance approximately equal to that value.

3.2.5 Reliability Factor

The degree of ignition circuit reliability required will vary according to the particular application. For example, in resistance welding when spot welds are to be made an ignitron omission is usually unacceptable, whereas when seam welding a single omission is seldom objectionable.

A simple, inexpensive ignition circuit may therefore be quite adequate for an installation where the ignitrons are operated at a high average current and duty factor; under such conditions deterioration of the igniter is much less and its characteristics remain practically constant. When spot welds are to be made however, the ignitrons are required to work under conditions of maximum demand power and low duty factor, which may result in a gradual deterioration in the igniter characteristics and consequent risk of omissions. A greater safety margin must therefore be allowed in designing the ignition circuit, since in spot welding the consequences of a single omission could be serious.

Reference should be made to the appropriate sections covering igniter characteristics and ignition circuit requirements in ch. 8, for information regarding these methods of control with different ignitron types.

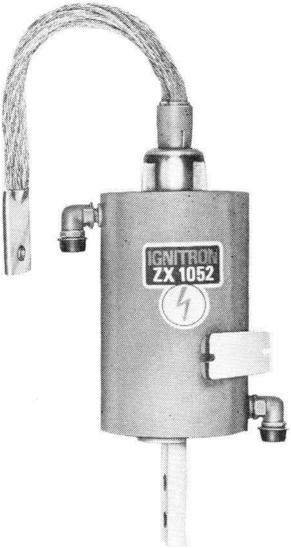

Fig. 3-18. Type ZX1052 ignitron (replaces former type PL5552-A).

3.3 Heat Dissipation

The arc discharge which occurs when an ignitron is fired produces a small voltage drop across the tube, the value of which is in the order of 12 to 18 V. In rectifier installations it is customary to define the arc voltage V_{arc}, as that value of voltage obtained when the arc losses P_l expressed in watts, are divided by the average current value I_{av}. By reason of this definition the arc voltage is assumed to be constant irrespective of slight variations in current, the tube losses being small compared with the value of power output and the overall efficiency at the lowest output voltage remaining high.

Most of the arc losses, which affect the mercury vapour pressure in the tube, are dissipated in the cooling water circulating in the water jacket or are expended by conduction via the anode and cathode terminals. The heat produced by the flow of current causes an increase in the temperature of the internal parts of the tube, which accelerates the heat transfer to the tube walls and cooling water. This also produces a corresponding increase in mercury temperature and thus vapour pressure, which must be carefully kept under control to avoid backfiring or runaway.

A limit is therefore imposed on the average value of current passing through the tube at high duty cycles, to establish a balance between the heat dissipated and the mercury temperature, thus averting the risk of damage. At higher current values with lower duty cycles as in spot welding, it is possible that the average current limit is not exceeded, but since the voltage drop across the tube increases with higher current peaks the development of heat may occur more rapidly. This gives rise to the problem of inefficient heat dissipation which if unchecked, produces a sudden rise in vapour pressure, endangering the tube's anode-cathode resistive properties and causing flash-over and breakdown of the tube. It is thus necessary to reduce the maximum value of I_{av} when the tube is operated at maximum demand. Further information on this subject can be found in ch. 7.

3.4 Phase Control

It has been assumed in the preceding paragraphs that the tubes operate under full cycle conduction conditions, being fired early in the positive excursion of the anode sine wave and continuing to conduct until the anode voltage falls to a level below the arc voltage. However, when the current must be altered rapidly as in resistance welding where a variable current cycle is required for pre-heat and post-heat operations, the phase control angle of the ignitrons is changed so that the tubes are fired at a later instant in the anode sine wave, thus reducing their conducting time over a given cycle. Fig. 3-19 illustrates graphically how this is achieved. By delaying the instant of ignition by an angle ϕ, conduction occurs for a period shorter than a mains half-cycle so that the value of I_{av} and thus the demand power is smaller than with full cycle conduction. Increasing ϕ will result in a further decrease in the conduction period.

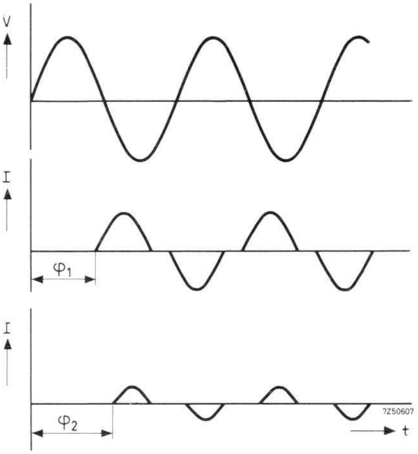

Fig. 3-19. Waveforms illustrating principle of phase control. Increasing angle ϕ decreases primary current I.

With inductive loads transients are likely to occur when phase control is employed, owing to the phase angle between voltage and current. These are avoided by arranging that the tube fires when the relationship between the voltage and current is such that the voltage leads the current by an angle ϕ when the latter passes through zero. This subject is described in greater detail in the appropriate section of the ensuing chapter.

It should not be construed that when phase control is used the duty cycle δ may be increased. In practice, by introducing a delay in the ignition of the tubes the duty imposed on them remains substantially the same. If in fact, the value of I_{av} during the shorter conduction periods were equal to the maximum permissible current at full cycle conduction, the value of peak current I_p would become excessive. Provided therefore that the power drawn by the load during full cycle conduction does not exceed the maximum rated power for the particular tube, conditions are correct for employing phase control.

References:

[1] *Van Daelen, H. J.*: "Firing of Ignitrons by Means of Thyristors", *Electronic Applications*, **25**, No. 4, March 1964/65.

4 Applications

The applications of ignitrons discussed in this chapter are intended to give the reader a complete, up-to-date picture of the full potential and wide range of uses of these tubes, in various fields where a.c. control or power rectification is required. Their use in resistance welding, d.c. motor drives and electric furnaces is dealt with initially in the ensuing paragraphs since these form the principal applications for ignitrons in modern industrial electronics. However their usefulness is not restricted to these fields alone, there being several other applications where the inherent simplicity, ease of control, long life and versatility of the tubes may be put to full advantage. Some of these less familiar applications are thus included herein. It should be understood that the applications covered are only representative and do not preclude the many other uses for these tubes, the list of which grows steadily.

4.1 Resistance Welding

The village blacksmith was most probably the first to employ a method closely similar to resistance welding when in the course of his work, he heated his metal parts in the forge and then shaped and joined them together on his anvil by hammering. In modern resistance welding the required heat is obtained by passing a strong electric current through the workpieces, which are then caused to merge together under an applied pressure.

Resistance welding is based on Joule's Law, which states that the heat generated by an electric current is proportional to the resistance of the conductor in which the heat is generated, to the square of the current and to the duration of current flow [1].

A much higher resistance to an electric current is presented at a junction between two metals than that offered by the metal alone. This is because the surface of any metal irrespective of the degree of finishing, is heavily pitted and scored, though these blemishes are usually invisible to the naked eye. Thus when the metal surfaces are placed together the

---

[1] $H = KRI^2t$. If R is in ohms, I in amperes, t in seconds and H heat in calories, then the constant $K = 0.2390$ cal/joule.

actual junction area is the sum of the numerous contact points and ridges, and is very different from the supposed theoretical junction. In consequence the amount of heat generated in the area of the junction is considerably greater than that in the surrounding metal.

The value of resistance between two metals varies with their respective hardness, conductivity, elasticity and freedom from impurities. The *total* contact resistance of the weld area between the welding electrodes is composed of:

— the resistance of the actual junction between the workpieces;
— the resistance of the workpieces themselves;
— the resistance of the contact area of the welding electrodes.

The application of pressure on the workpiece and the manner in which this is applied also affects the contact resistance. When pressure is applied, the elasticity of the material is overcome and crushing and flattening of the surface irregularities occurs, which decreases the resistance at the junction of the workpieces. Temperature is also an important factor, since it reduces the hardness of the surface irregularities. These and other factors essential to the production of adequate welds, are discussed more fully later in this chapter.

4.1.1 Methods of Resistance Welding

Fig. 4-1 illustrates the various resistance welding methods utilizing the heating effect of a strong electric current, which are suitable for obtaining different types of joints. To give the reader a clearer insight into the various processes each is summarized briefly, enabling an overall picture

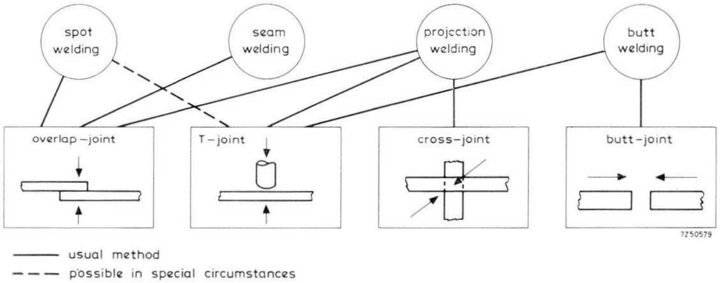

Fig. 4-1. Representation of resistance welding methods suitable for making different types of joints.

of this type of welding to be built up. The usefulness and advantages offered by the ignitron in this field will thus be more clearly realized.

Spot Welding (Fig. 4-2)

In this method the metals to be welded are held in a stationary position and pressed together by two electrodes, at the point where the joint is to be made. A strong current is then passed through the pressure contact area. The applied current is large enough to generate sufficient heat at this point to cause the metals to melt and fuse together, under the pressure exerted by the electrodes. The size of the finished spot weld is governed by the electrode contact area, the type of material and the welding time.

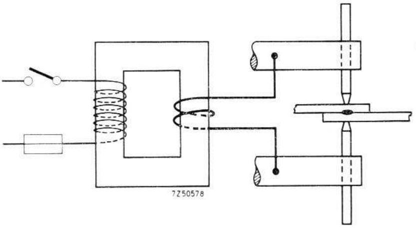

Fig. 4-2. Principle of spot welding.

Seam Welding (Figs. 4-3*a*, *b* and *c*)

This method is similar in principle to the previous one but here the materials to be welded are driven at a constant speed and pressure by a

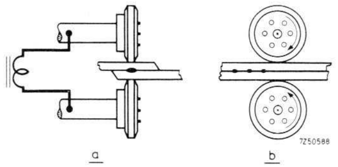

Fig. 4-3. (a), (b).
Principle of seam welding.

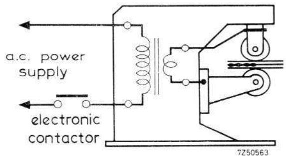

Fig. 4-3 (c). Simplified drawing of pneumatically-operated, longitudinal seam welding machine.

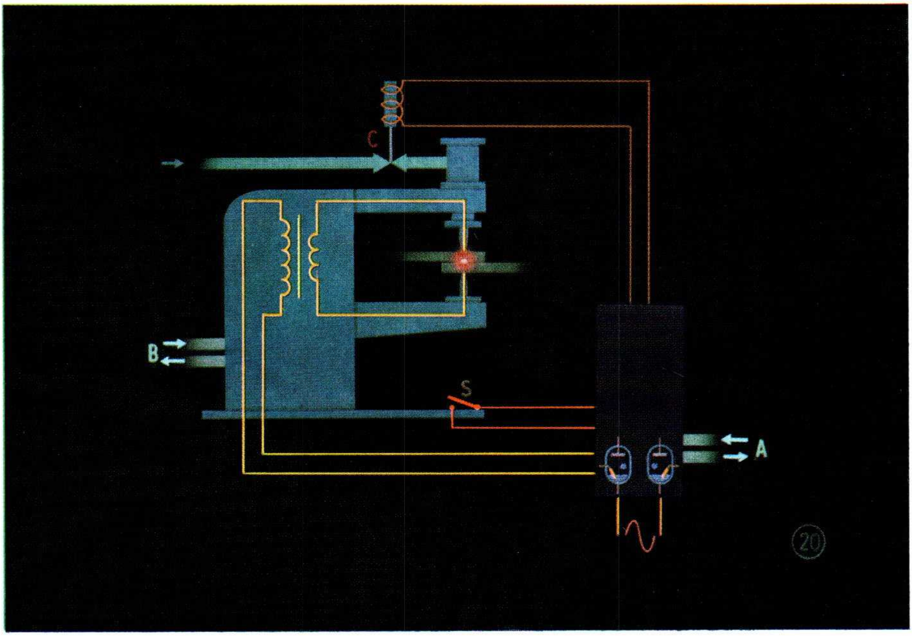

Fig. 4-4. Schematic representation of typical spot welding machine.

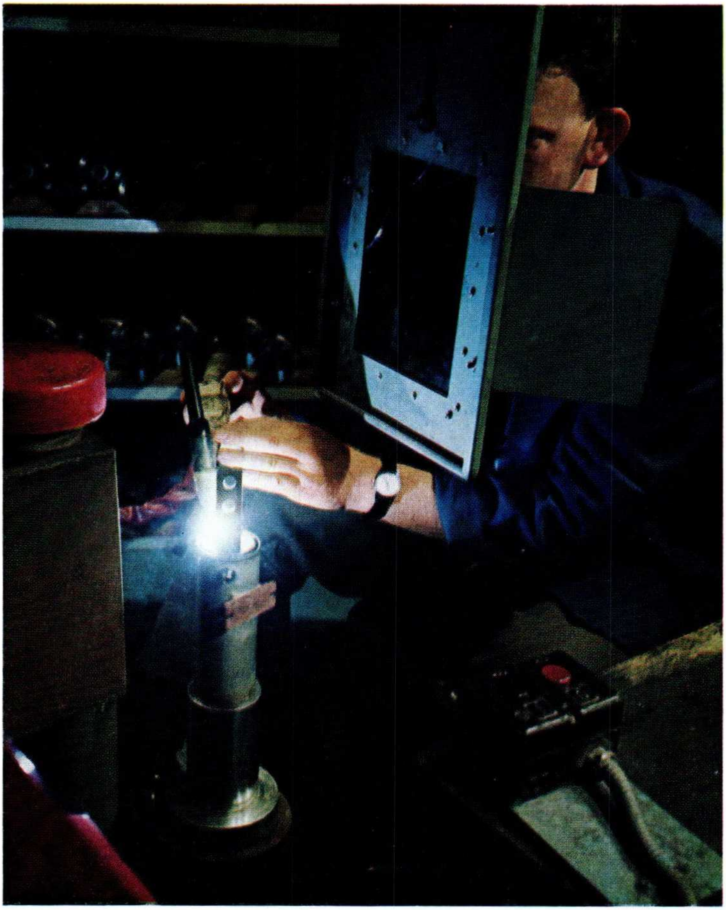

Fig. 4-5. The inner and outer walls of an ignitron water jacket being welded together during manufacture.

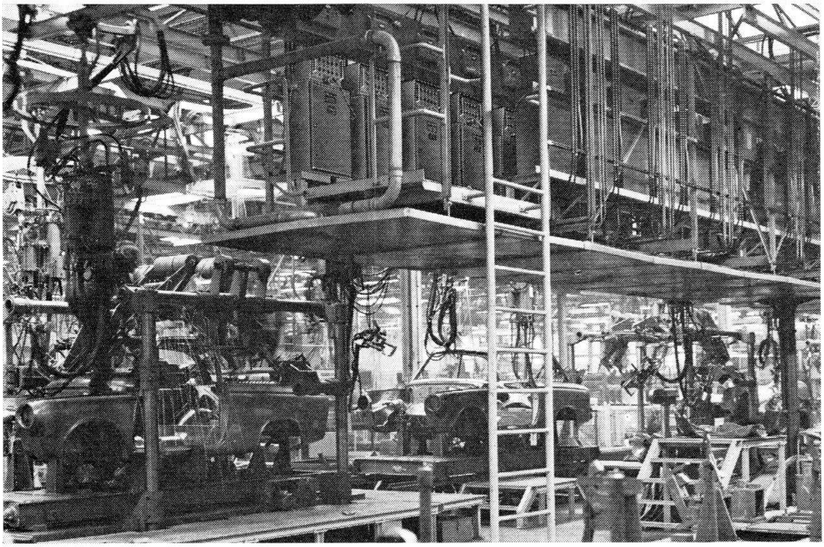

Fig. 4-6. Car factory assembly line showing ignitron-controlled welding equipment (above centre).

Fig. 4-7. Large ignitron-controlled seam welding lane.

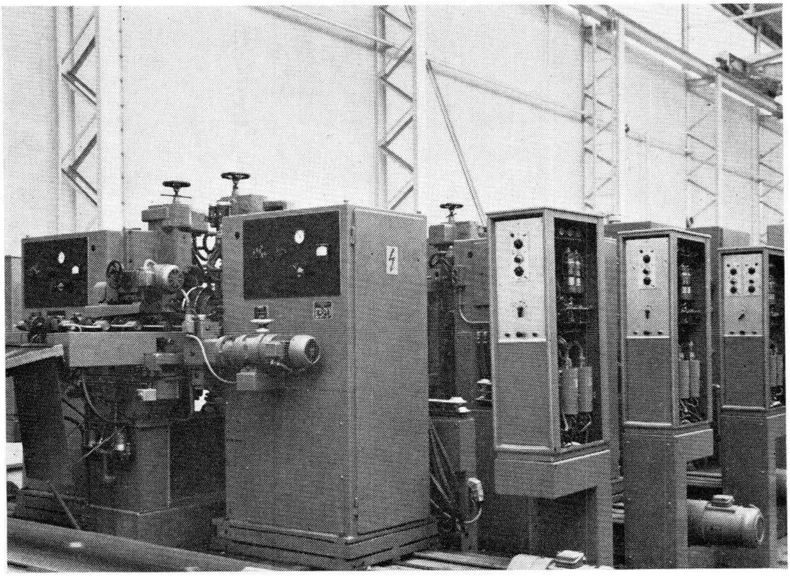

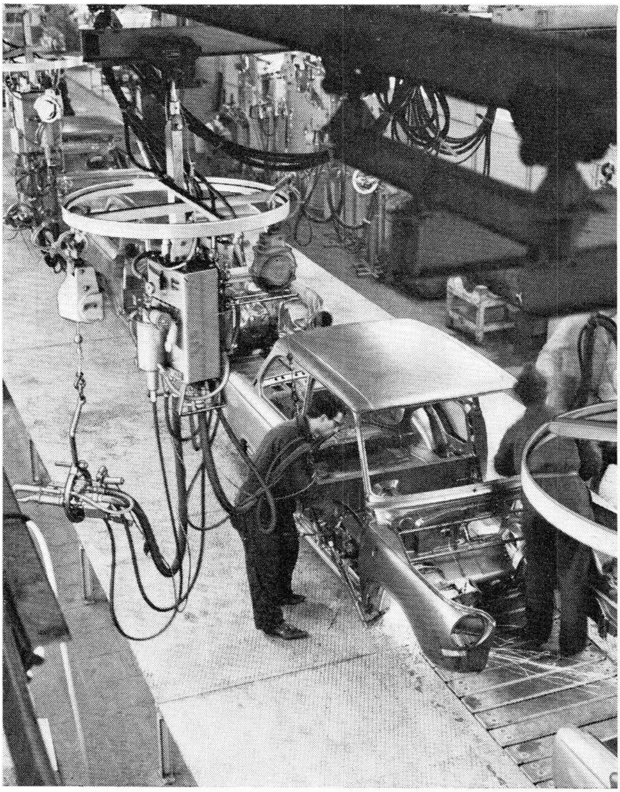

Fig. 4-8. Coachwork structural parts being welded using ignitron-controlled equipment. The welding "dolly" is seen suspended on the left.

pair of rotating wheels or, when for example aluminium is to be welded, roller electrodes through which the welding current is passed. When welding, the supply current is applied at regular intervals to produce a series of equidistant spot welds which may overlap, rather than a continuous weld. The width of the seam weld is almost the same as that of the contact area of the welding electrodes.

Projection Welding (Figs. 4-9*a* and *b*)

Mechanical pressure is exerted on the workpiece by a pair of plane-faced electrodes which carry the welding current. The current path through the workpiece is localised in a specific area by one or more projections on one face of the parts to be welded. When the welding temperature is reached the projections merge under pressure with the surface of the part opposite, to form a weld. Unlike the two preceding methods the current distribution and weld area is determined by the dimensions of the projections.

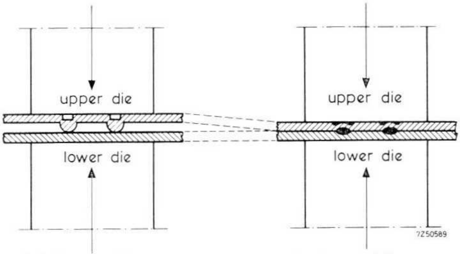

a) before welding b) after welding

Fig. 4-9. (a), (b). Principle of projection welding.

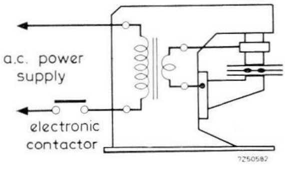

Fig. 4-10. Simplified drawing of pneumatically-operated, press type projection welding machine.

Butt Welding (Figs. 4-11*a*, *b* and *c*)

This method of resistance welding is widely employed when metals are to be joined end-to-end to form continuous strips, bars or tubes, or when ring-shaped or circular parts are to be welded.

Among the three types of butt welding methods available, *flash welding* is by far the most widely used. In this method the two workpieces are firmly held in position by two pairs of current-carrying electrodes, and are slowly advanced towards each other until they very slightly touch. Immediately a heavy current flows, causing the metal in the contact area to vaporize so that an arc is formed in the ionized metal vapour. This produces a shower of sparks or "flash" across the opposing end surfaces. The flashing is accompanied by the production of heat which spreads over the whole contact area cross-section, causing the junction to become plastic and the end surfaces to become of uniform flatness. Following a momentary programmed interval an end-pressure is applied to the workpieces, so that the metal in the area of the junction fuses, forcing any scale etc. to the outside of the joint. The area of the completed weld is equal to the cross-section of the particular workpieces.

This method has largely supplanted the *upset welding* process in butt welding techniques. The upset method differs in that the facing ends of the workpieces are held in close contact under pressure during the initial stage, the effect of current flow through the end surfaces where the contact resistance is highest causing fusion.

In the third method of butt welding known as *percussion welding*, an intense discharge of electrical energy occurs shortly before or simultaneously with the application of high pressure, which may be in the form of a sudden, hammer-like blow. This process is normally used when butt welding pieces of wire, rod or tubing together or to flat surfaces which may be of dissimilar material. Certain types of butt welds

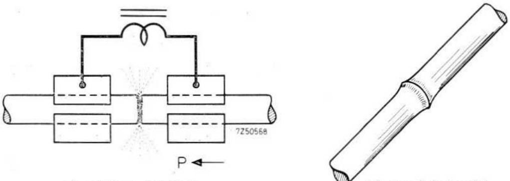

a) welding process

b) completed weld

Fig. 4-11. (a), (b). Principle of flash butt-welding.

can be effected by means of a seam welding machine fitted with a special welding head (Fig. 4-11*c*).

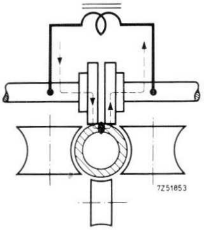

4-11. (c) Butt welding with specially adapted seam welding machine.

Stored Energy (Capacitor Discharge) Welding

This type of welding can be compared to spot welding, the principal difference being the method employed to supply the welding electrodes with sufficient energy for obtaining satisfactory welds. In this system, unlike conventional spot welding equipment driven directly from the mains, the requisite amount of welding energy is stored in a bank of capacitors which are discharged at regular, pulsed intervals into the primary of the welding transformer. The value of the induced secondary current is high enough to generate sufficient heat in the electrode contact area to cause welding of the material. The capacitor bank is recharged during the pause time between each successive discharge control pulse, when the bank is disconnected from the welding circuit.

Resistance welding generally is a very flexible means of joining metals, and can be employed over a large range of sizes and shapes of different materials. Commercial stock of all types such as sheet, plate, strip, wire, rods, bars, tubes and wire mesh can be readily resistance welded. For each of the principal resistance welding processes special machines have been devised, ranging in size from small bench-type welders to large installations in which elaborate work-handling devices and control equipment are included.

Resistance welding techniques can be employed for a number of widely different purposes, ranging from light work such as sealing the metal cans of transistors and the construction of tube electrode assemblies, to welding heavy sheets, plates and railway lines of up to 75 cm^2 ($29\frac{1}{2}$ in^2) cross-section. Using the flash-butt welding method, bars of 23 cm^2 (9 in^2) cross-section can be sucessfully welded. To illustrate the wide field in which ignitron-controlled resistance welding methods can be employed, a selection of industrial uses are summarized briefly below:

Motor vehicles — Spot and seam welding of carriage-work, frame-members and other parts for motor-cars, trucks, vans, lorries, buses, trams, motorcycles and scooters.

Railway rolling stock — Spot welding of structural parts for passenger coaches, goods vans, and wagons of various types.

Aircraft industry — Spot and seam welding of light alloy structural parts and high-quality metals for jet engines, e.g. "*Nimonic*" steel.

Central heating apparatus — Water and pressure tight, spot and seam welding of stampings and pressings for radiator elements.

Steel containers — Spot and seam welding of fuel tanks, oil and petrol drums, canisters, cans, dust-bins and . . . ignitrons!

Household appliances — Spot and seam welding of pots, pans, kettles, buckets, tubs, trays, etc. in the enamel-ware household goods industry; refrigerators, washing machines, dish-washers and other domestic appliances.

Hardware — Spot and projection welding of metal sheet and strip stampings and pressings, toys and other articles.

Furniture trade — Spot welding of sheet metal desks, steel cabinets, drawers, trays, racks etc. for both office and household use.

Steel wire products — Welding of wire lampshade frames, bird cages, wire mesh, steel mats for reinforcing concrete, window display stands, kitchen utensils, etc.

Electrical products — Spot and projection welding of electric light fittings, electronic components, frames and chassis for radio and television receivers, racks and chassis for radio transmitters and telephony equipment.

Before discussing in detail the application of ignitrons in resistance welding, in particular in spot and seam welding, it would be prudent to first examine the essential requirements for obtaining satisfactory welds.

4.1.2 Welding Temperature

To obtain an adequate weld the duration and magnitude of applied current and pressure exerted on the workpiece are very important factors. The welding heat of a given material may not necessarily be the same as its melting point. For example, when working with mild or alloyed steels it is often possible to obtain satisfactory welds at temperatures several hundred degrees centigrade below the melting point of the material, when the workpiece has become sufficiently soft and plastic so that the pressure exerted by the electrodes ensures a solid union at the welding point. This is the principal difference between electric welding of the resistance type and flame or arc welding, where an additional agent such as a welding rod is necessary which must actually melt to produce a satisfactory weld.

Besides ordinary steel, coated and plated types such as tin plate, terne plate, galvanized and chromium-plated steels can all be spot welded successfully. With chromium-plated steel however, there is a risk of marring the surface of the chromium plate, which is too thin to permit subsequent finishing.

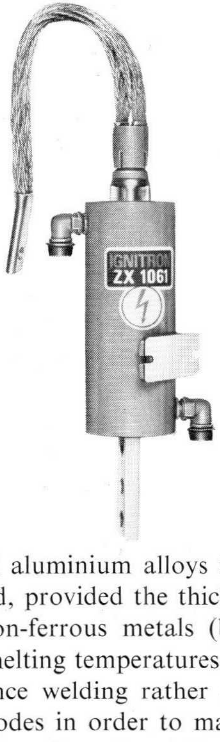

Fig. 4-12.
Type ZX1061 ignitron.

Commercial aluminium alloys in either sheet or extruded form may be spot welded, provided the thickness of the material is not too great. With most non-ferrous metals (bronze, brass, aluminium alloys) the welding and melting temperatures of the material lie close together, rendering resistance welding rather difficult. One solution is to cool the welding electrodes in order to maintain the area around the weld at a lower temperature than the welding point, which is in a plastic state.

4.1.3 Heat Factor

The electrical energy supplied must be stringently controlled, since excessive heat would cause melting of the surface of the workpiece and the subsequent formation of a hole. Conversely, insufficient heat would result in a weak or unreliable weld, or perhaps no weld at all!

The heating energy in watt-seconds (Ws) or joules generated in the weld contact area, is determined by the magnitude of the welding transformer secondary current, the duration of current flow, and the contact resistance of the weld area. The contact resistance is a function of the pressure exerted by the electrodes on the workpiece, using mechanical, pneumatic or hydraulic means, and of the surface condition of the material. The secondary of the welding transformer behaves as a highly inductive circuit, thus producing a constant current whose value is largely independent of the resistance of the weld area. However, the surface condition of the workpiece has a direct bearing on the amount of heat energy required to obtain a good weld. Summarising, there are thus three factors which determine the amount of energy required to produce a satisfactory weld:

— the contact resistance of the workpiece (welding pressure);
— the current magnitude (welding current);
— the duration of current flow (welding time).

Not all the heat generated in the weld area is usefully employed however, since losses occur due to heat dissipation in the material surrounding the welding point and moreover, a certain amount of energy is consumed by the welding electrodes. Because the heat losses increase cumulatively with time, ideally the best thermal conversion efficiency is obtained by limiting the welding interval to the shortest possible time compatible with producing an adequate weld; practically all the heat generated is then concentrated in the immediate weld area. In general, the better the conductivity of the material to be welded the shorter the time required for producing a satisfactory weld.

4.1.4 Weld Time Control

In order to ensure uniformity of successive welds it is important that the welding time and current value for each weld are exactly the same and, once the optimum has been established for a particular type of workpiece, remain constant for any later operations.

When used in conjunction with a suitable electronic control circuit the ignitron switching times can be accurately controlled, enabling the welding heat to be kept within the required limits and thereby ensuring the production of identical welds.

Sequence Control of Spot Welding

A comprehensive spot welding sequence would comprise the following separate operations:

- — applying mechanical pressure to the workpiece with the welding electrodes (squeeze time);
- — passing the required pre-welding current through the workpiece (pre-heat time);
- — reducing the mechanical pressure on the workpiece during welding in order to obtain a higher contact resistance;
- — passing the heavier welding current through the workpiece (weld-time); this may be gradually increased initially and later decreased (slope control);
- — reducing the welding current for post-heating and simultaneously increasing the electrode pressure, so that the material in its plastic state, is forged (forge time);
- — switching off the post-heat current so that the workpiece cools down at high mechanical pressure (hold time);
- — easing the pressure by separating the electrodes, enabling the workpiece to be removed (off time).

The welding sequence is usually represented diagrammatically (Figs. 4-13*a* and *b*). In the figures, typical spot welding cycles are shown for steel sheets and aluminium material. The mechanical pressure exerted

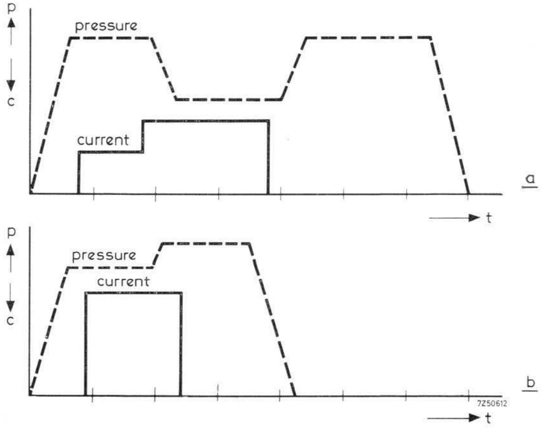

Fig. 4-13. (a) Typical welding cycle for spot welding steel sheets; (b) Welding cycle for spot welding aluminium sheets.

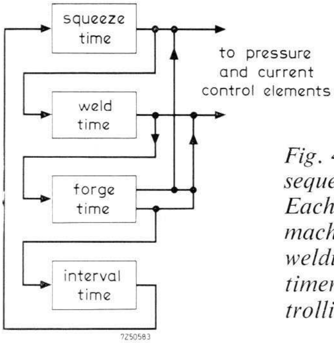

(a)

Fig. 4-14. (a) Block diagram of typical sequential timer assembly for spot welding. Each timer unit controls a particular machine function i.e. pneumatic valves, welding heat, etc.; (b) Electronic sequential timer equipment (right foreground) for controlling a number of welding installations.

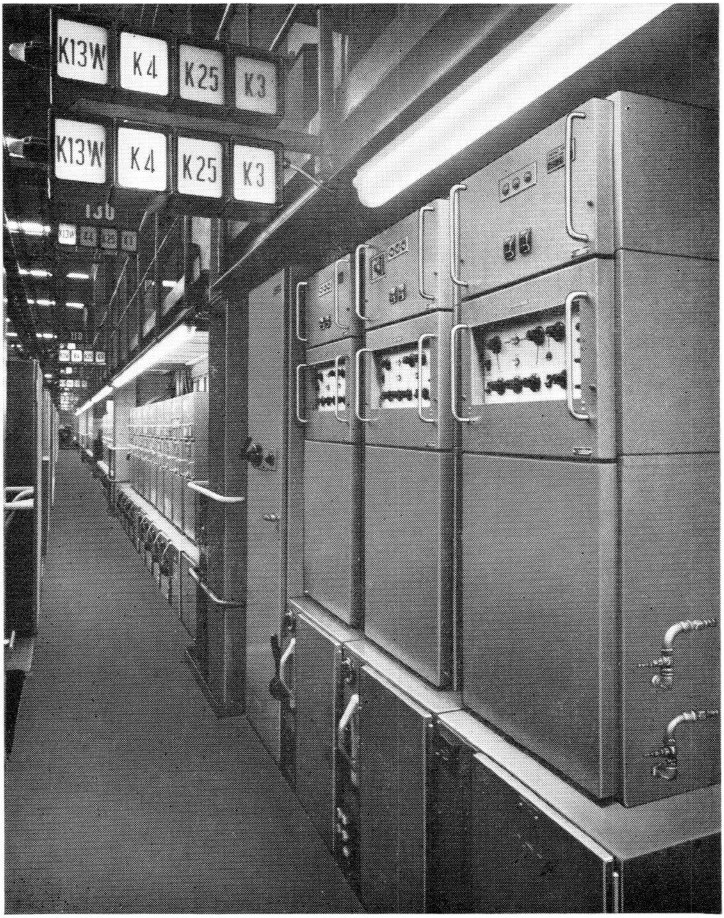

(b)

and r.m.s. value of current are plotted together with intervals of time. The diagrams give a clear indication of the extent to which the operations coincide. The current and pressure time during the complete welding sequence can be controlled by an electronic sequential timer (Figs. 4-14 *a* and *b*), which ensures that each operation occurs in the correct sequence and at the precise moment during the cycle.

Seam Welding Control

The operations described in the preceding section are generally applicable to the procedure adopted in seam welding, however certain problems peculiar to this method do arise. These will now be discussed.

Unlike in spot welding, the mechanical pressure imposed on the workpiece must be kept constant so that when the upper wheel electrode is lowered at the beginning of the seam weld, the pressure does not change until the seam is completed. In seam welding in addition to accurately controlling the magnitude and duration of current during the welding interval, it is also necessary that the weld repetition rate which determines the distance between successive welds, be rigidly controlled (Figs. 4-15 *a*, *b* and *c*). It might be thought that periodic breaking of the welding current would result in an uneven seam owing to gaps between the welds.

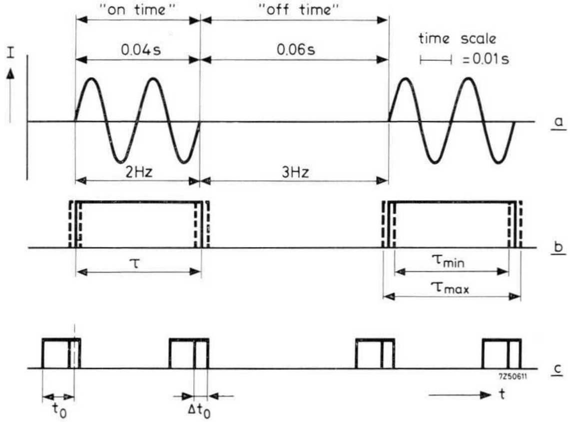

Fig. 4-15. (a) Seam welding cycle; (b) Period in which ignitrons conduct (time τ*) and remain quiescent during welding cycle.* τ_{max} *and* τ_{min} *denote maximum and minimum welding intervals; (c)* t_0 *is average time required for firing and cutting off ignitrons;* Δt_0 *being the variation in this time. Maximum variation in weld time is:* $\tau_{max} - \tau_{min} = 2\Delta\tau_0$.

In practice this does not happen however, since the entire weld area is in a plastic state and each weld extends to the perimeter of the preceding weld and so on. When for instance a pressure-tight weld is required, it is most important that the pressure imposed on the workpiece by the wheel electrodes and their speed of rotation, is carefully set appropriate to the nature of the weld material, its thickness and the necessary welding speed.

4.1.5 Single-Phase and Three-Phase Welding Systems

The choice of single- or three-phase a.c. control for a particular welding application is influenced largely by two factors: (*a*) the loading imposed on the mains supply and (*b*) the value of the welding circuit secondary impedance at the particular mains frequency, and its effect on the available welding power. In circumstances where it is evident that the adoption of a single-phase system would be derogative to even loading of the mains and possibly cause interference to neighbouring services, three-phase a.c. control would be more advantageous. Its choice may also be justified when the impedance of the welding transformer secondary is such that insufficient welding power is available from a single-phase system.

Since the value of the secondary impedance varies proportionately with frequency, a three-phase frequency changer welding system where the load is spread evenly over the three supply phases and which converts the mains frequency to a much lower figure, results in an appreciable improvement in efficiency.

Single-Phase System

Two ignitrons connected in anti-parallel (Fig. 4-16), are used for single-phase a.c. control. Both tubes act as rectifiers, each conducting on alternate half-cycles of the supply voltage. The magnitude of the a.c. flowing through the load is largely dependent on the load impedance, the voltage drop across the tubes being virtually negligible. Since no current flows through the tubes in the quiescent (non-conductive) state, by controlling the instant of firing the ignitrons can in this configuration, act as a single-pole contactor switch which is capable of continuous or semi-continuous power handling. It is customary to control the current by varying the phase control angle of the tubes. A large current passes through the tubes when fired, however its average value during a complete welding period is relatively low.

The circuit of Fig. 4-16 can be modified for synchronous control by the addition of the timing elements indicated by the broken lines in the figure. Another type of practical, single-phase synchronous welding control is described fully later in this chapter.

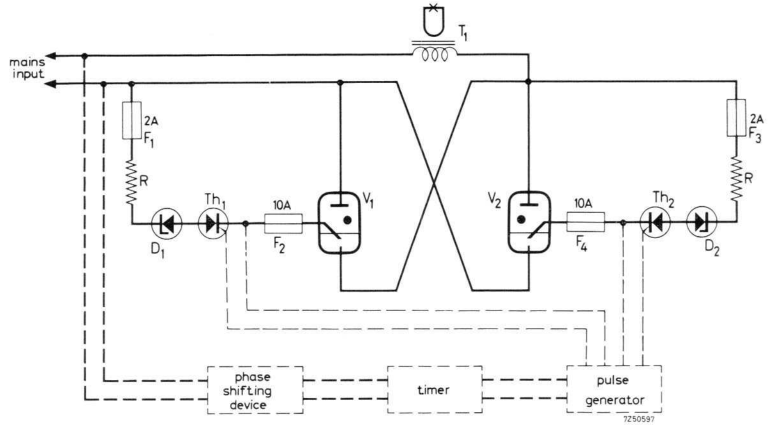

Fig. 4-16. Single-phase control of resistance welding.

Three-Phase System [1]

Three pairs of ignitrons in anti-parallel configuration are connected to phases *A*, *B* and *C* respectively of the three-phase supply (Fig. 4-17). In this arrangement the ignitrons behave as two electrically coupled three-phase rectifiers, each group of three tubes conducting on alternate half-cycles of the three-phase mains. Rectification of the applied voltage takes place and an l.f. waveform is produced across the primary of welding transformer T_1.

Fig. 4-18 shows another arrangement employing a welding transformer having three separate primaries, each connected in series with an ignitron pair across two consecutive phases. The main difference between this circuit and that of Fig. 4-17 lies in the type of welding transformer used. However, the two methods are alike in that with each an alternating primary flux at relatively low frequency is produced, which provides the required welding current.

Let us now examine more closely the operation of this type of circuit, which in the interests of operating efficiency and clarity is assumed to be controlled by an ignition circuit of the separately-excited type. Assuming a 50 Hz, three-phase a.c. supply and V_1 in the conducting state so that current flows from phase *A* through the tube and

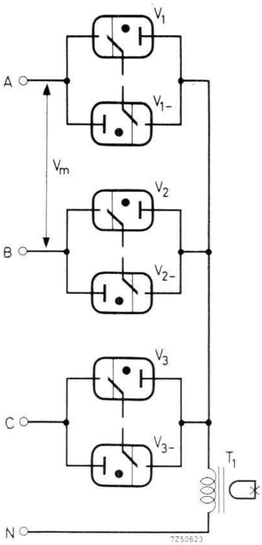

Fig. 4-17. Three-phase welding control system in which the total current flows through the neutral line.

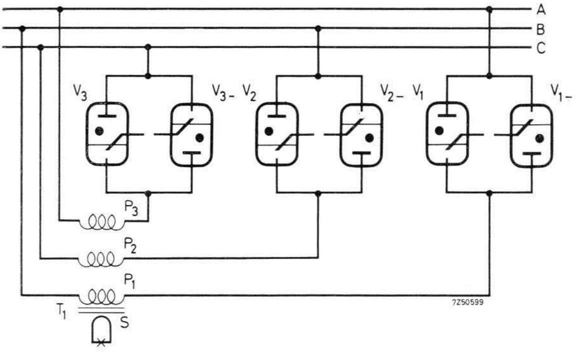

Fig. 4-18. Three-phase frequency changer welding control circuit employing a special welding transformer having three separate primaries.

primary P_1 to phase B. At the beginning of the l.f. half-cycle, the l.f. current cycle induced in the secondary circuit of the welding transformer T_1 is initiated, and commences to rise in a positive direction. Assuming that the phase control angle chosen is ϕ, referred to the zero voltage point through which V_1 anode passes during the positive excursion of applied voltage. It is arranged to ignite V_2 120° later, when the phase B voltage of corresponding polarity reaches the value at which V_1 was fired in phase A. In practice the phase control angle ϕ is chosen so that the instantaneous value of anode voltage is sufficient to ensure takeover of the arc discharge.

When V_2 is fired commutation commences and the load transfers from phase A to phase B and current flows through primary P_2, resulting in a further positive increase in the secondary l.f. current half-cycle. At the end of the commutation time (≈ 0.5 to 1.5 ms) the current through P_1 ceases. Exactly 120° later during the positive excursion of phase C, V_3 is fired and current flows through P_3, the load transferring to phase C. Following a further delay of 120°, V_1 is ignited again and the load transfers to phase A once more.

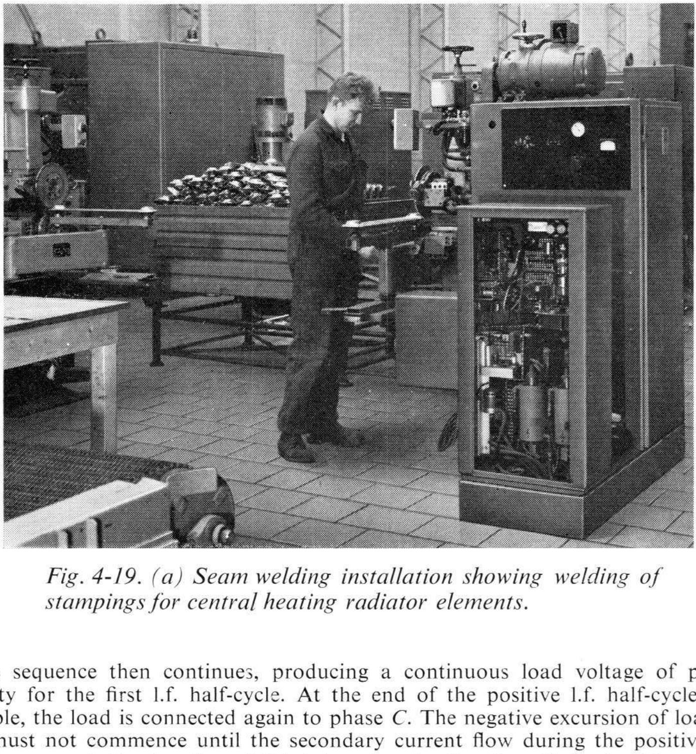

Fig. 4-19. (a) Seam welding installation showing welding of stampings for central heating radiator elements.

The sequence then continues, producing a continuous load voltage of positive polarity for the first l.f. half-cycle. At the end of the positive l.f. half-cycle in this example, the load is connected again to phase C. The negative excursion of load current must not commence until the secondary current flow during the positive half-cycle has ceased; the duration of this interval varies directly with the load impedance, being shorter with a low inductive load and vice-versa.

A similar sequence occurs during the negative l.f. half-cycle, ignitrons V_1—, V_2— and V_3— being successively fired and current flowing through the primaries in the opposite direction, causing a build-up of flux in the reverse sense. The load is transferred from phase to phase at accurately timed intervals to form the induced negative l.f. half-cycle in the transformer secondary. Reference to the drawings of Figs. 4-20 *a* and *b* shows that power is fed to the load during two cycles of the 50 Hz input. The complete l.f. cycle occupies a total period of 5 cycles of 50 Hz mains and has therefore a fundamental frequency of 10 Hz. It can be seen that the load voltage is composed of 120° positive voltage segments from each phase, whilst the load current comprises 120° blocks of uni-directional current drawn successively from each phase. The number of 120° segments determines the welding frequency. By varying the phase

Fig. 4-19. (b) Close-up of welding equipment. Ignitrons are seen at bottom right and rotating wheel welding electrodes in front of the operator.

control angle which affects the load transfer from one phase to the next, the welding heat may be controlled (Fig. 4-21).

The separately-excited method of firing has been assumed in the foregoing, since with self-excited systems the phase control angle is considerably smaller than ϕ. This is because it is necessary for the anode voltage to reach a minimum of 200 V before the tube may be fired, which is not always acceptable since it leads to a reduction in output power.

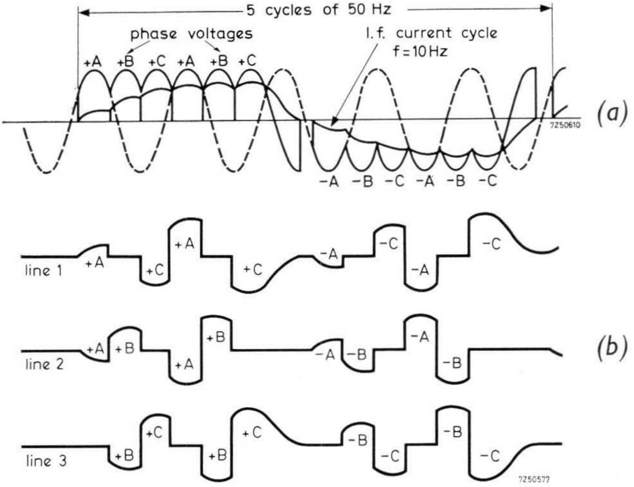

Fig. 4-20. (a) Waveforms illustrating principle of converting three-phase a.c. mains input to single-phase l.f. current; (b) Line currents.

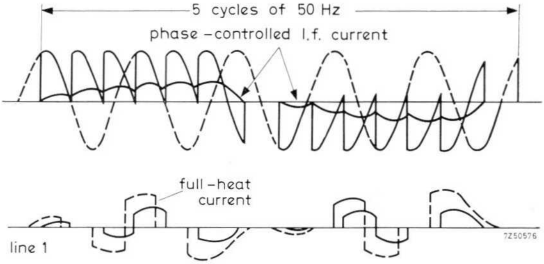

Fig. 4-21. Variation of l.f. current value and thus effective welding heat by altering phase control angle.

4.1.6 Asynchronous Operation

In this type of operation the firing instant is arbitrarily chosen irrespective of the value of mains voltage, heat control being dependent on the duration of the conduction interval. Under these conditions the incidence of transients is likely. Since the welding circuit is normally highly inductive, transients may occur at the instant of ignition which may cause considerable variation in the energy produced during each weld period. This is a serious drawback because the resulting asymmetry in the current waveform produces a d.c. component in the primary circuit, which may result in saturation of the transformer core and consequent irregularity and loss of quality of welds. Moreover, the transients also cause appreciable voltage variations in the a.c. mains supply which may interfere with other services (Fig. 4-22*a*,*b*).

A satisfactory solution to this problem is provided by synchronising the control circuit with the mains voltage, so that firing occurs at the

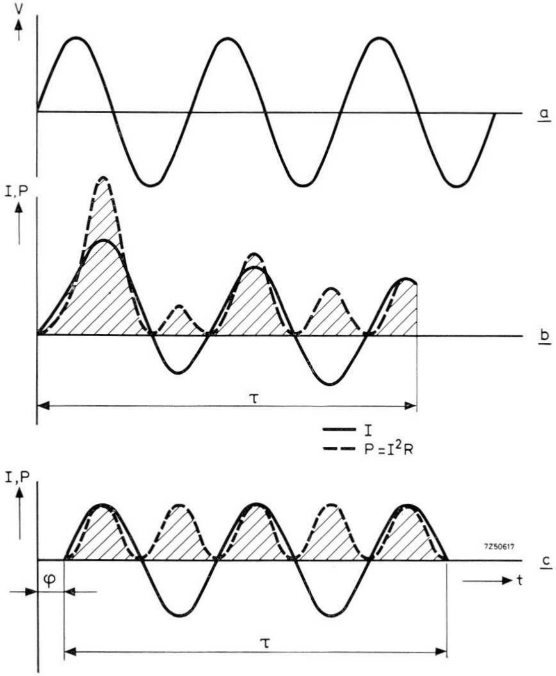

Fig. 4-22. (a) Three cycles of mains voltage as time reference; (b) Current and power curves when ignition occurs at zero voltage, giving rise to transients; (c) Current and power curves when ignition is delayed by an angle ϕ, corresponding to phase shift caused by lagging power factor of load.

same instantaneous value of mains voltage at the beginning of each welding cycle. The load being highly inductive, the applied voltage will lead on the current by an angle which is determined by the power factor (cos ϕ). The control circuit should therefore not be initiated until the value of current under hypothetical continuous operating conditions is zero (Fig. 4-22*c*); the incidence of transients is then eliminated.

4.1.7 Practical Synchronous Control

Fig. 4-23 shows a practical form of single-phase synchronous control employing self-excitation and featuring a single thyristor as the static control element. Let us assume a mains input half-cycle which makes the anode of ignitron V_1 positive. When a current pulse is applied to the gate of thyristor Th_1, the device conducts and current flows through one half of the bridge circuit formed by diodes D_2-D_5 to the igniter of V_1, causing the tube to fire. The voltage regulating diode D_1 ensures a constant voltage drop across the ignition circuit and prevents further

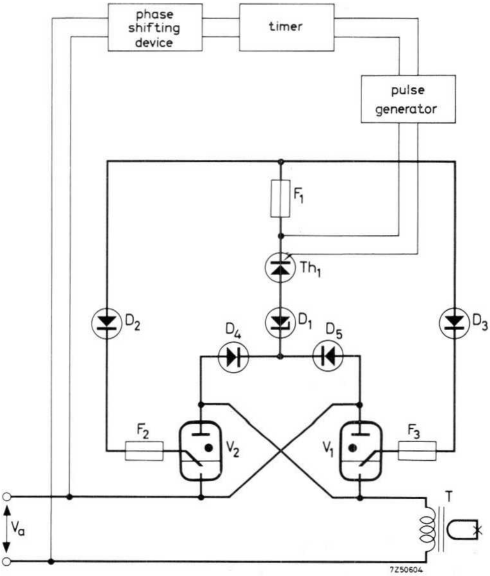

Fig. 4-23. Practical single-phase synchronous control circuit.

conduction of the thyristor after ignition has occurred, thereby eliminating the risk of loss of control. The thyristor is then turned off until the next half-cycle occurs. At the end of the positive half-cycle, the ignitron anode potential falls to below the arc voltage and the tube reverts to its non-conductive state. When the anode of ignitron V_2 becomes positive a similar action takes place, Th_1 being triggered again so that current flows to fire V_2.

The thyristor gating pulses are synchronised with the mains frequency via an *RC* phase shifting and timing arrangement which delays the instant of firing by an angle ϕ, so that the tube conducts only for a predetermined portion of the supply half-cycle. The phase control is arranged so that ignitron firing occurs at the particular phase angle between mains voltage and current, which prevents transients and provides the correct instantaneous value of anode voltage required for reliable firing.

When the applied mains cycle passes through zero it might appear that conduction of the ignitrons ceases. In practice this is not true however since when, as in welding applications, the load is highly inductive, the fall in load current produces a back e.m.f. which exceeds the value of mains voltage during the negative half-cycle, and tends to maintain the ignitron anode positive whilst the mains voltage passes through zero. This condition obtains for an interval corresponding to an angle θ, during which the tube continues to conduct until the anode falls to a level insufficient to maintain the arc ($<\theta$). If ignition is therefore delayed so that $\phi \approx \theta$, the incidence of transients will be avoided before and after firing, continuous operation of alternate ignitrons being obtained (Figs. 4-25). Evidently, increasing the phase control angle ϕ decreases the conduction period; it is thus possible to vary the r.m.s. value of current and the average power delivered to the load.

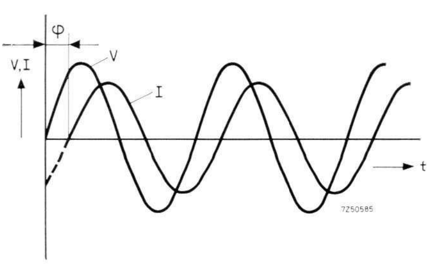

Fig. 4-25. Waveforms showing correct phase relationship between voltage and current for transient-free ignition.

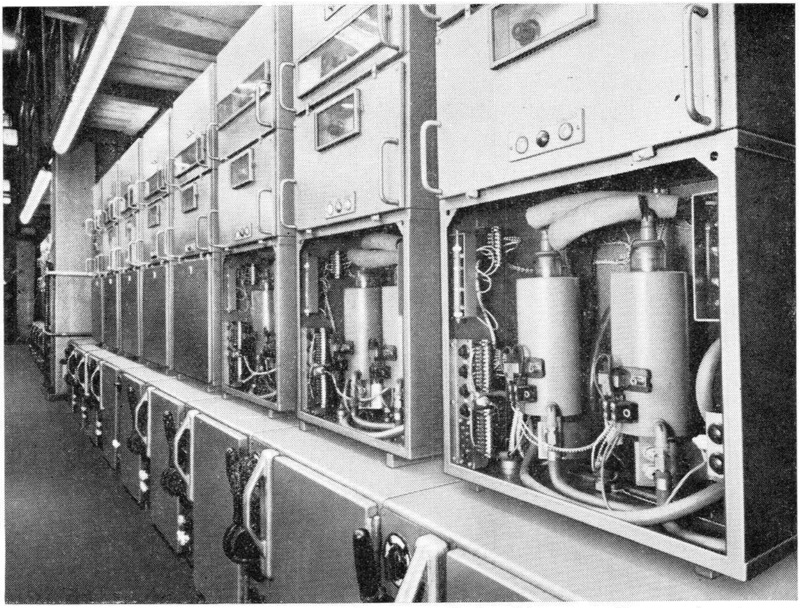

Fig. 4-24. (a) Large electronically controlled welding installation showing location of ignitrons;

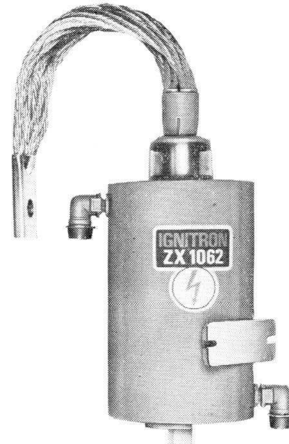

Fig. 4-24. (b) Type ZX1062 ignitron.

The timing circuit is normally designed to meet the requirements for a specific application. These may include as in certain welding operations, a programmed number of current cycles occurring at well-defined intervals and when required, having different intensity and duration to provide pre- and post-heating of the workpiece.

A typical, synchronously controlled three-phase welding system based on the frequency-changing principle, is shown in Fig. 4-26; the circuit

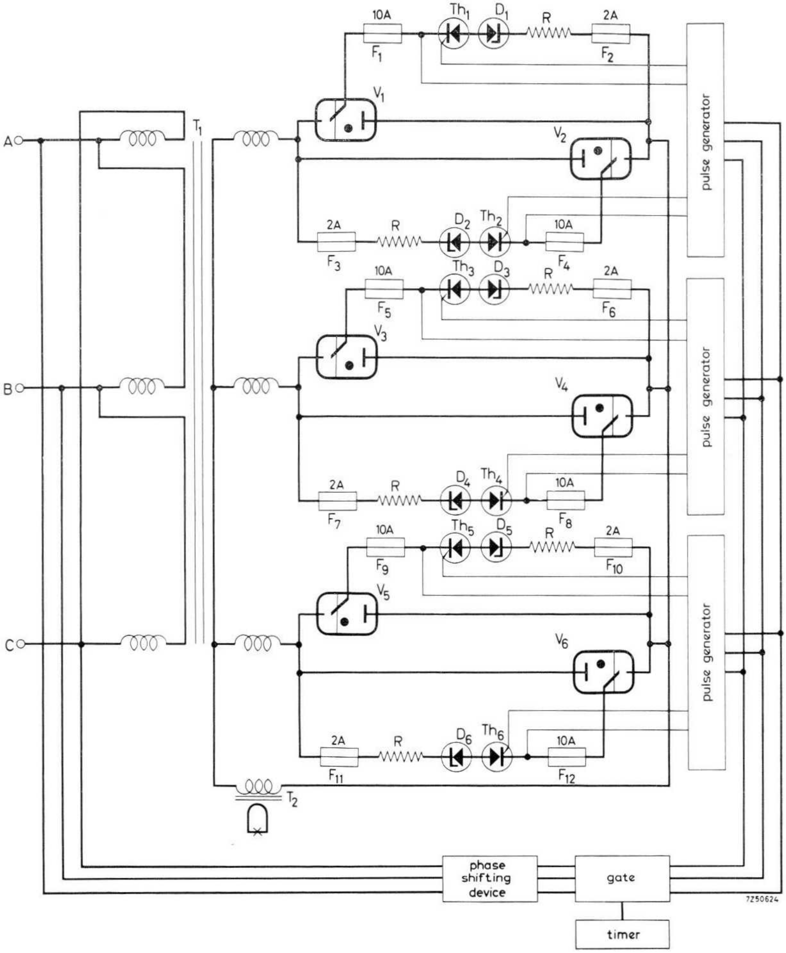

Fig. 4-26. Practical synchronously controlled three-phase welding system.

has delta-connected primary and star-connected secondary windings and uses thyristor control elements and voltage regulating diodes.

Fig. 4-27. Car production line showing partially assembled coachwork constructed by means of an ignitron-equipped welding system.

Operation of the circuit is similar to that described in sect. 4.1.5, an alternating l.f. flux being developed across the primary of welding transformer T_1. Self-excitation is employed in conjunction with an electronic timer.

4.1.8 Stored Energy Welding System [2]

The simplified circuit of Fig. 4-28 shows the principle of this type of welding. The mains supply is applied to the primary of a variable step-up transformer T_1 via a current-limiting, protecting choke L_1. The current in the secondary circuit flows via a limiting resistor R_1 and thyristor Th_1, to charge the capacitor bank C_n. At the end of the charging interval when the required charging voltage is reached, Th_1 is switched off. The control unit automatically controls the charging current, switching the thyristor so that current flows to the capacitor bank at the beginning of the charging interval and is interrupted on completion of charging.

When the capacitors are fully charged ignitron V is fired, closing the welding circuit so that the capacitor bank is discharged into the primary of the welding transformer T_2; the capacitor bank becomes fully discharged in a time of 1 to 100 ms. A large current pulse is delivered to the transformer, giving rise to a very high value of peak secondary current. The duration of the capacitor bank charging interval between pulses of welding current is determined by T_1, R_1, Th_1 and C_n. The amount of welding energy can be varied by altering the value of the capacitor bank, the charging time, and the applied secondary voltage. One of the main advantages of a welding system of this type is the relatively light loading on the mains, as compared to the other types of resistance welding equipment driven directly from the mains.

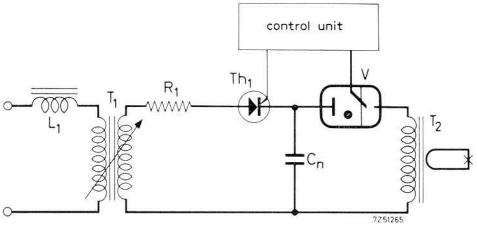

Fig. 4-28. Basic circuit of stored energy welding system.

It is customary with other types of resistance welding machines to specify the power handling capability of a particular installation, given in kVA. Stored energy welding equipment differs in that the available welding energy (E_w) is normally specified, being expressed in Ws, where 1 Ws = VIs. Since the duration of the welding time and the voltage and current values required for making satisfactory welds are known, the welding energy can be calculated.

In the example which follows a comparison is drawn between an a.c. controlled resistance welding system with phase control, and one operating on the stored energy principle. Assuming that the workpiece is such that in order to obtain an adequate weld a current (I) of 100 kA, a welding time (t) of not less than 0.01 s and a voltage of about 10 V are required. Neglecting losses, the energy E_w required for stored energy welding is:

$$VIt = 10 \times 10^5 \times 10^{-2} = 10\,000 \text{ Ws}.$$

With a welding repetition rate of 30 pulses/min. the amount of power transferred to the capacitor bank during a 2 s charge interval is thus 5 kW. With an a.c. controlled welding system however, the peak power drawn from the mains under these conditions is $VI = 1000$ kVA.

The installation cost of a 10 000 Ws stored energy welding machine, is somewhat lower than that of an equivalent a.c. controlled resistance welding system having a peak loading capability of 1000 kVA. Moreover, the very short welding times characteristic of pulse welding systems result in a considerable reduction in heat losses, since the period during which the welding current flows is much shorter. Owing to the brief conduction interval the heat generated at the welding point has little effect on the surrounding area, thus minimising the risk of structural changes in, or deformation of the workpiece, and enabling welding of metals having a high thermal and electrical conductivity to be successfully carried out. After heat has been applied the weld cools off very quickly, the finished weld being of a fine crystalline nature. Because the amount of welding energy is determined by the charge stored in the capacitor bank, the product VIt is not affected by dissimilarities in the contact resistance of the workpiece, making it possible to obtain a constant amount of welding energy and thus welds of uniform quality.

This type of welding technique is well suited to mass production applications and can be employed in a wide variety of manufacturing processes. A small stored energy welding machine of 18 Ws capacity equipped with a suitable welding head, can for example be used for spot welding miniature assemblies such as the grids of transmitting tubes, transistor connections or relay contacts etc., at speeds of up to 250 welds/min. Machines capable of supplying the requisite energy may also be used in the manufacture of tools and accessories, and for welding small precision parts in the aircraft, watch and camera industries.

4.2 D.C. Motor Drives [3]

Heavy current rectifiers have for a number of years, occupied a special place in industrial applications when a reliable source of d.c. power is required. They have been used with considerable success in such diverse fields as public transportation, electro-chemical processes and the mining industry.

Rectifier ignitrons have proved to be particularly useful for d.c. motor drives where their ease of control, high speed of response and ability to handle short-term overloads and high blocking voltages, are most advantageous. They are moreover highly efficient, the complete absence of moving parts being conducive to the use of static components. A basic electronic d.c. motor drive system is given in Fig. 4-29. The a.c. selector shown in the drawing enables the equipment to be operated from either a.c. supply, whilst the motor switches select different combinations of motors and rectifiers. This enhances the reliability of the system and affords a large measure of flexibility. A complete installation usually comprises one or more pairs of units connected in this manner.

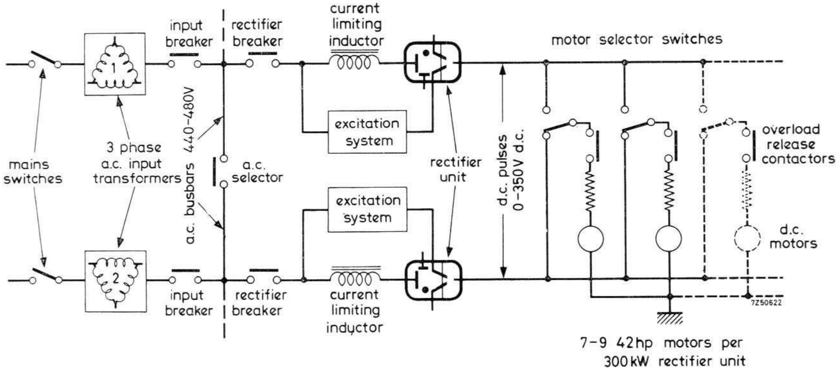

Fig. 4-29. Simplified line diagram of basic electronic d.c. motor drive system.

The principal requirements of a d.c. motor drive system are summarized as follows:

— continuous adjustment of armature voltage from zero to maximum;

— armature voltage must be regulated;

— the regulation time of response must be small compared to the inertial effects of the load.

A typical three-phase controlled power rectifier suitable for driving the above system, using ignitrons and including the necessary control elements, is given in Fig. 4-30. The operation of this circuit will now be examined.

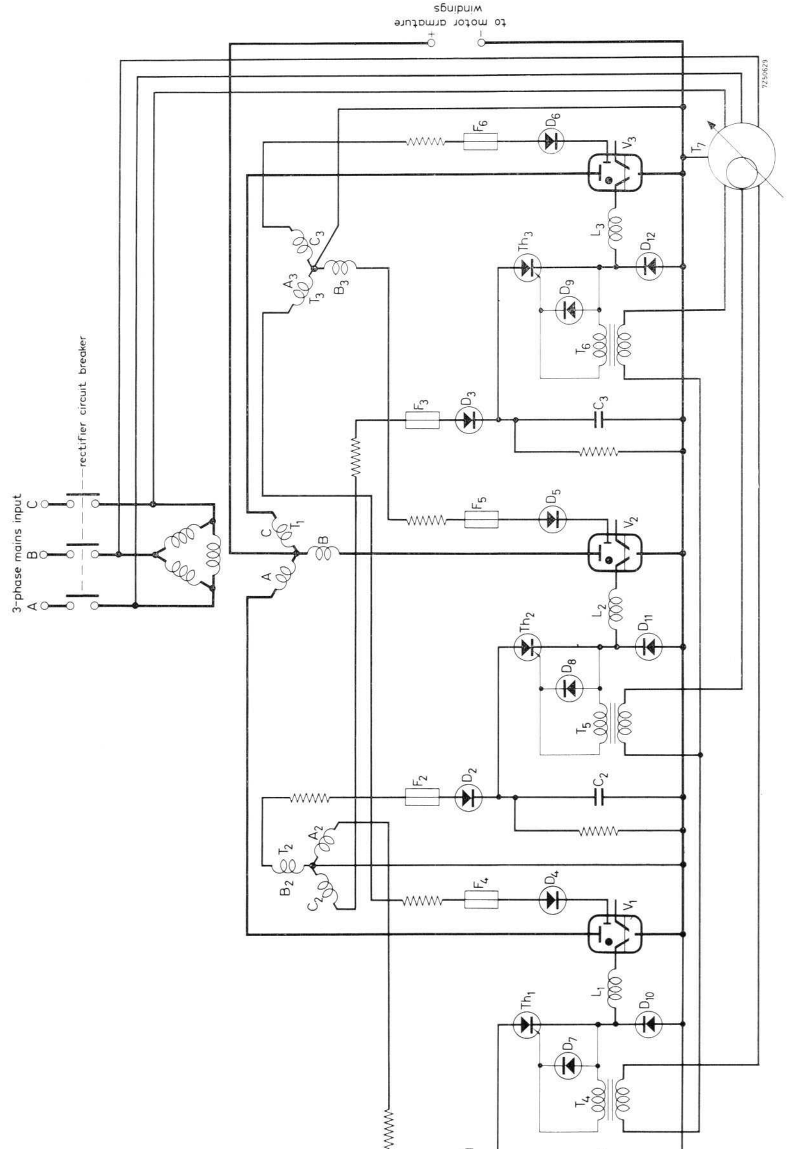

Fig. 4-30. Basic three-phase controlled power rectifier unit equipped with ignitrons.

The three-phase a.c. mains input is applied via the mains switch to the delta-connected primary of power transformer T_1. Each input phase (A, B and C) appears across the appropriate windings in the star-connected secondary. The A, B and C phase windings are connected respectively to the anodes of rectifier ignitrons V_1, V_2 and V_3, the star point forming the positive output terminal. Two smaller three-phase auto-transformers T_2 and T_3 supply the necessary voltages for the ignition control elements and auxiliary anodes; the ignition circuits are of the separately-excited type. T_2 also performs a phase shifting function, effecting a 180° phase shift in the ignition circuit supply voltages to obtain the correct working conditions. Since the functioning of each ignitron and its associated circuitry is identical, it will suffice to describe the operation of V_1 in order to understand the behaviour of the circuit as a whole.

Let us assume a negative half-cycle of phase A, which makes the anode of V_1 negative so that the ignitron is non-conductive. Current will flow from the star point of T_2 through winding A_2 to the silicon diode D_1, where it is rectified to charge capacitor C_1 with the polarity shown. The anode connection of thyristor Th_1 will thus be held at some positive potential well below the forward breakover voltage point of the device, the thyristor being in its forward blocking "off" state when the value of leakage current is very low. Application of a positive current pulse of sufficient magnitude and duration (150 mA, 10 to 50 μs) to the gate of Th_1 when V_1 anode commences to swing positively, will drive the thyristor into its high conduction "on" state producing a pulse which, applied to the igniter of V_1, causes the tube to fire. The thyristor current pulse is of relatively short duration (≈ 30 μs) the igniter current being maintained by the inductor L_1 (ref. ch. 3 sect. 3.2.4) for a further time interval, to ensure anode takeover. A high voltage d.c. is delivered by V_1 and passed to the load circuit. At the beginning of each positive half-cycle of anode voltage, a positive d.c. component derived from winding A_3 of transformer T_3 and rectified by silicon diode D_4, is applied to the auxiliary anode of V_1. As soon as the igniter is triggered, the discharge is taken over by the auxiliary anode and will be maintained for as long as the applied voltage remains sufficiently positive. Sufficient ions and electrons are thus available in the discharge area to maintain conduction, even when the main anode potential falls to within a few volts of, or below the minimum value; erratic quenching of the arc is thus eliminated and smooth, regular operation obtained.

The applied a.c. eventually passes through zero and at the commencement of the negative half-cycle the anode of V_1 swings negatively, causing the tube to return to its quiescent condition. There is in fact a short delay before the tube cuts off, owing to the effect of the back e.m.f. in the inductive load. Since a 180° phase difference exists between the applied voltage and that across the A_2 winding of T_2, capacitor C_1 will charge once again during the negative half-cycle and the sequence will repeat during the next positive excursion of anode voltage.

In order to obtain accurate control of the output voltage, elaborate arrangements are necessary which ensure that thyristor triggering occurs at the required instant. These comprise a "horizontal" control circuit containing three peaking transformers T_4-T_6, each of whose primaries are connected to a branch of the star-connected, variable secondary of a phase shifting transformer T_7. The phase connection points of the delta-connected primary of the phasing transformer are fed by the three-phase input supplies. The peaking transformer secondaries are each connected to a thyristor gate, the correct phase control angle for each tube being adjusted by T_7. Fig. 4-31 shows the effect on the d.c. output voltage of varying the phase control angle ϕ.

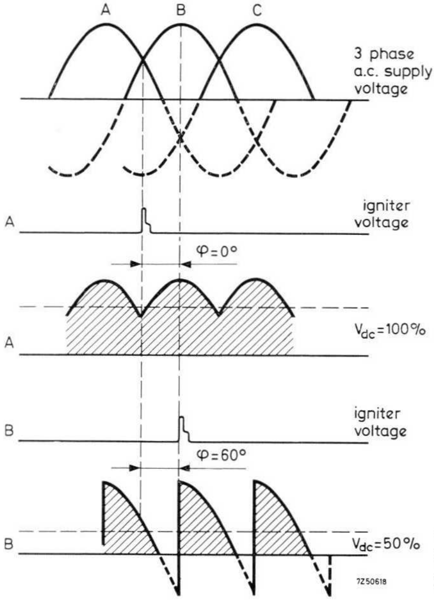

Fig. 4-31. Waveforms showing the effect on d.c. output voltage of varying tubes phase control angle ϕ.

4.3 Furnace Temperature Control

The illustrative circuit shown in Fig. 4-32 is another example of the application of ignitrons, in this instance for delivering power to an electric furnace at an accurately controlled rate to maintain a constant heating temperature.

The circuit employs the separately-excited method of firing, the instantaneous value of anode voltage at the beginning of each positive half-cycle being insufficient to ensure reliable ignition with self-excitation. Unlike the applications described previously, where the load exhibited an appreciable reactance which had to be considered when determining ignition accuracy, the circuit load here is almost purely resistive. Its power factor is thus virtually unity, so that the load voltage and current are assumed to be in phase. The system incorporates feedback control elements which automatically shift the phase control angle of the ignitrons, to compensate for any changes in furnace temperature and keep the furnace at the correct operating level. Potentiometer R_5 sets the static condition of the control network over a range of operating temperatures; the furnace heat transducing element may be either a thermistor or thermocouple. With this type of circuit automatic control of powers of up to several hundred kVA is possible.

In high-temperature furnaces of the tubular type, operating at temperatures somewhere in the region of 1000 to 2000 °C, the refractory insulating material commonly used in the construction and lining of the furnace tends to become conductive. This may result in electrolytic erosion of the insulating material on the furnace walls, with consequent risk of danger to operating personnel. It is highly desirable therefore that the applied voltage be as low as possible, compatible with supplying the furnace with sufficient energy for satisfactory operation. Ideally, in view of the large amount of energy required, the furnace should be fed from three-phase mains. However, the difficulty of supplying the heating element then arises, the use of a three-phase step-down transformer to feed a tapped element being impracticable at such high operating temperatures. Moreover, splitting the element into three equal parts would result in two "cold" areas being formed in the furnace, owing to heat conduction in the necessarily heavy gauge supply leads. It is essential

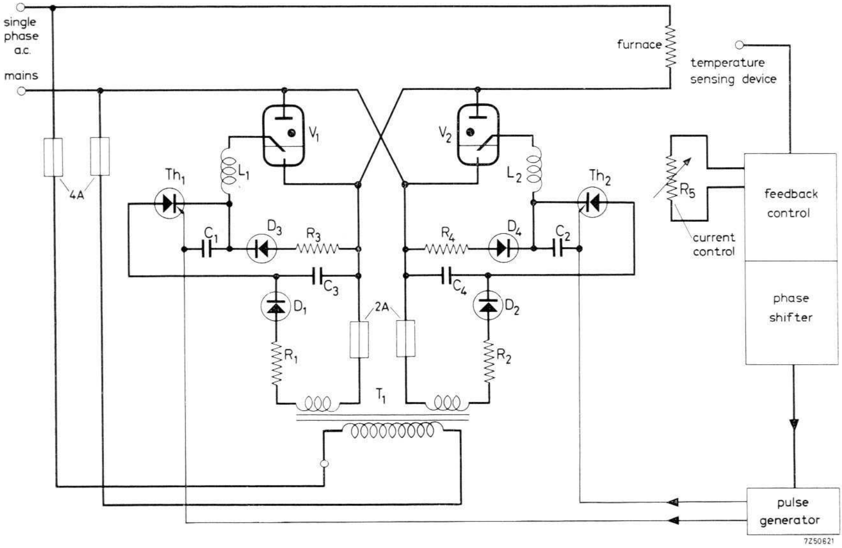

Fig. 4-32. Temperature control system for supplying an electric furnace.

therefore, that the heating element be a single, helically wound coil.

A ready solution to the problem of feeding the heating element is to convert the three-phase supply to a low-frequency a.c. by means of an ignitron-equipped three-phase frequency changing system. The circuit of Fig. 4-18 in sect. 4.1.5 though developed primarily for semi-continuous three-phase welding control, is equally suitable for this application. The circuit can be easily adapted for feeding and controlling an electric furnace, an uninterrupted but continuously controlled, single-phase a.c. then being supplied to the heating element.

4.4 Switch Closing

Electromechanical high-voltage a.c. and d.c. circuit breakers of the air-blast or oil-quenched type for power switching in electrical distribution networks, usually require a low-resistance d.c. power source to energise the closing solenoid. Currents in the region of 60 A are sometimes necessary for closing certain breakers and when simultaneous closing of two or more breakers is required, it is essential that the energising source be capable of supplying a direct current of 120 A at about 220 V. Large ampere-hour capacity storage batteries can deliver the requisite power but have the disadvantage of being relatively expensive, and where low duty cycles are involved are rather uneconomical; moreover, they require frequent skilled maintenance. A high-power vacuum tube is unsatisfactory for this application, since considerable power losses are incurred by the supply of continuous heater current during the quiescent intervals. With metal rectifiers on the other hand, the incidence of reverse currents and the sometimes appreciable internal voltage drop may result in failure to close the circuit breaker.

The essential requirements of the controlling device for this application can be summarized as follows:

— it must be capable of delivering a high, short-term current pulse during the brief interval when the breaker closes (≤ 1 s);

— power wastage in the form of heat dissipation, static current drain and voltage drop be minimal;

— maintenance be considerably reduced.

Ignitron tubes meet all the above requirements and are ideally suited for delivering the necessary power to operate the circuit breaker. Two alternative circuit arrangements are possible, both of which fulfil the necessary conditions for reliable and efficient operation of the breaker.

Fig. 4-33 shows one arrangement comprising a pair of ignitrons connected in a form of full-wave rectifier configuration, which supplies the necessary d.c. to operate the three-phase circuit breaker; each tube is self-excited, controlled by a common, double-pole relay. Water cooling of the ignitrons is not normally required in this application since the duty cycle is usually very low.

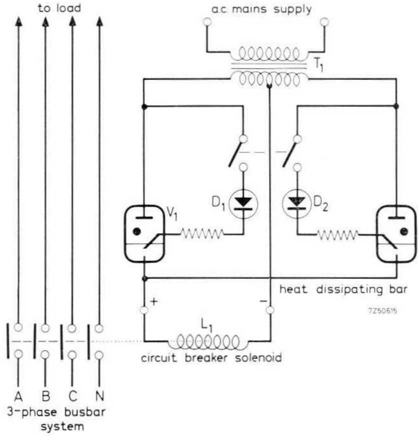

Fig. 4-33. Ignitron rectifier for closing a three-phase h.v. circuit breaker.

When the control relay is energised its contacts close and the ignition circuits of V_1 and V_2 are completed, causing the tubes to fire alternately. The ignitrons continue firing on the positive mains half-cycles and current continues to flow through solenoid L_1 until the control relay is de-energised. In the absence of water cooling the heat generated by the tubes is dissipated in a common copper bar of large cross-section, and in the heavy duty anode cables. Diodes D_1 and D_2 used in the ignition circuits must be capable of withstanding the peak inverse voltage of the tubes.

Environmental tests with this type of pulsed rectifier have yielded results which are considered satisfactory for the most stringent operating requirements. The circuit can deliver 200 A/s at 220 V for 20 s with a 1-minute pause before a further 20 ignitions, without noticeable heating of anode and cathode. Each tube was active for approximately 0.25 s during each firing operation.

A second method, which dispenses with the transformer of the previous circuit, is given in Fig. 4-34*a*; the omission of the transformer considerably cheapens cost, and reduces losses since the total impedance of the circuit is also decreased. In this circuit the two ignitrons are connected in anti-parallel, the anode connection of V_1 being connected to the cathode of V_2 via the centre-tapped load coil L_1, which acts as the closing solenoid for the breaker. When the control relay is energised the associated contacts close to complete the ignition circuits, and the tubes are fired. Current flow through the solenoid is uni-directional, thus the magnetic flux produced on alternate half-cycles by the two components of current is additive, with the result that the core is magnetised in the same sense sufficiently to pick up the breaker. In order to protect the tubes and load solenoid from overheating it is necessary in this circuit to include an auxiliary relay (not shown), which breaks the control relay energising circuit at the end of each 1 s firing interval. This ensures that the ignitrons are shut off in the event of incorrect operation of the push-button firing switch by the operator.

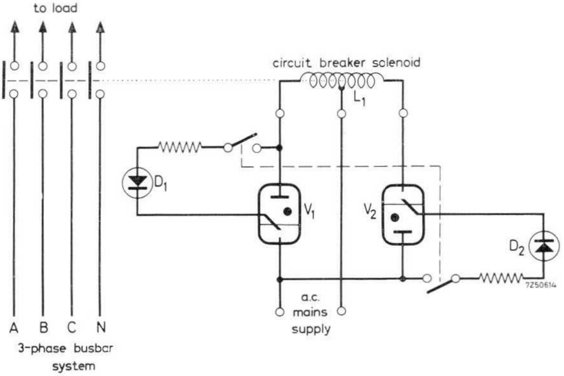

Fig. 4-34. (a)
Alternative circuit for closing breaker, dispensing with mains transformer.

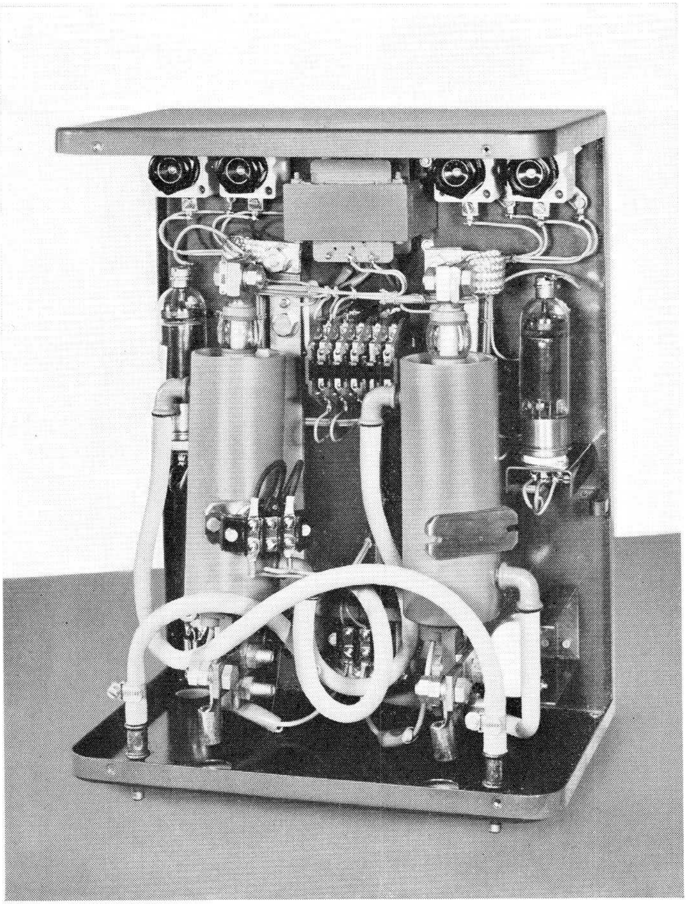

Fig. 4-34 (b) View of cabinet housing ignitrons (cover removed).

4.5 Magnetizing Permanent Magnets [4.5]

An important application for ignitron tubes is in impulse magnetizing equipment for magnetizing permanent magnets. Here their compact size, versatility and robustness offer considerable advantages over more costly and unwieldy systems employing d.c. motor-generator sets, used in conjunction with electromagnets or surge transformers.

The uni-directional current pulses required for magnetizing can be provided by a half-wave rectifier deriving its supplies directly from the mains. However with this method, the power drawn from the supply sometimes becomes excessive: as high as 750 kVA during one mains half-cycle. Thus for reasons of economy, preference is given to impulse magnetizing equipment initiated by the release of energy from an inductor or capacitor bank.

Impulse magnetizers comprising an ignitron tube, trigger unit and storage element(s) charged from a.c. mains, are relatively inexpensive and though at some sacrifice in operating speed compared to the former method, are capable of delivering large current pulses whilst making only moderate demands on the power drawn from the supply. Magnetization may be effected by passing the current pulse through a magnetizing coil consisting of a few turns of heavy gauge cable, or through the primary of a transformer having a high current step-up ratio and a specially constructed secondary, comprising a pair of conducting members across which a copper shorting bar is bolted.

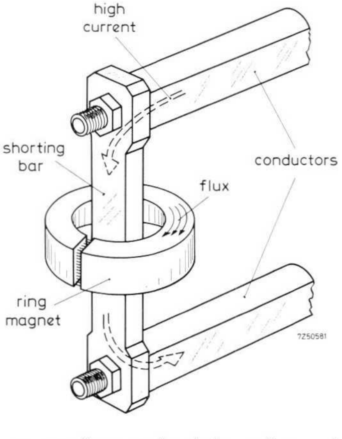

Fig. 4-35.
Principle of impulse magnetizing showing mounting assembly.

The operating principle of an impulse magnetizer employing the latter arrangement is illustrated in Fig. 4-35. In the drawing a ring magnet having a narrow air-gap is being magnetized; the shorting bar is fitted across the two secondary conductors to form a low-impedance, closed electric loop. The shorting bar passes through the centre of the magnet so that when a large, short-duration current pulse is applied to the transformer, a concentric magnetic field is built up around the bar. The magnetic lines of force intersect the ferro-magnetic material of the ring magnet and create north and south poles across the air-gap.

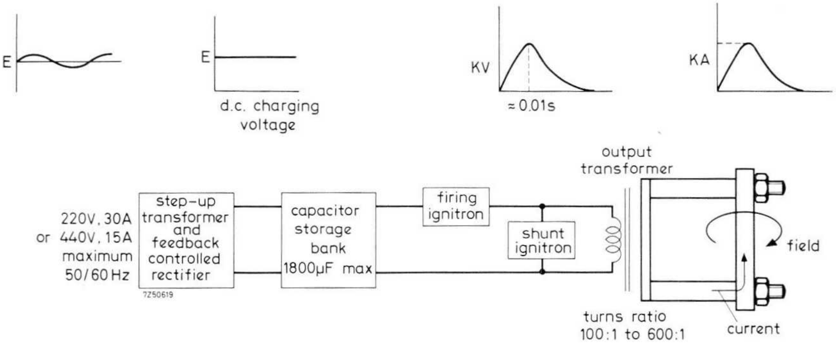

Fig. 4-36. Block schematic diagram of impulse magnetizing equipment.

Fig. 4-36 shows a block diagram of a magnetizer driven from a bank of capacitors having a total capacitance of 1.8 mF, which are charged from the mains by a step-up transformer and rectifier. In this system the maximum power demand imposed on the supply is 6.6 kVA at a power factor of roughly 0.7, the capacitor charging voltage being held to within $\pm 2\,\%$ for line voltage variations of between $+10$ and $-20\,\%$ to give uniform magnetizing pulses. The magnetizing current can be controlled either by varying the charging voltage, or by the selection of different values of capacitance in the capacitor bank; the bank is discharged into the primary of the input transformer by firing the series-connected ignitron. With a suitable transformer turns ratio and adequate control of capacitor voltage, the peak value of the secondary output current can be varied between 40 and 200 kA and a peak pulse output power of 1500 kVA obtained.

The shunt ignitron connected across the primary of the output transformer, prevents the energy in the secondary circuit oscillating back into the primary at the end of the magnetizing pulse, to cause unwanted demagnetization of the workpiece. The shunt tube fires when the capacitor bank is fully discharged, so that the voltage across the primary is clamped at approximately zero volts and the direction of current flow sustained (Fig. 4-37).

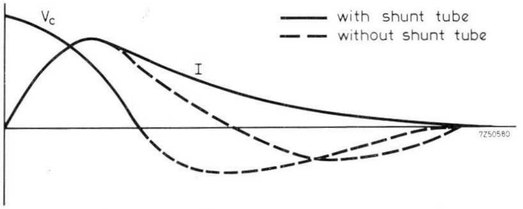

Fig. 4-37. Waveforms showing relationship between capacitor voltage V_c and discharge current I, with and without shunt ignitron.

The impulse magnetization technique facilitates the magnetizing of magnets of various shapes and sizes, ranging from bowl-shaped magnets for magnetrons to small cylindrical slotted magnets used to provide eddy-current damping in wattmeters, several of which may be magnetized together. Fig. 4-38 shows the two ring magnets of a magnetron being magnetized simultaneously after assembly.

It is also possible with this type of magnetizer to effect production

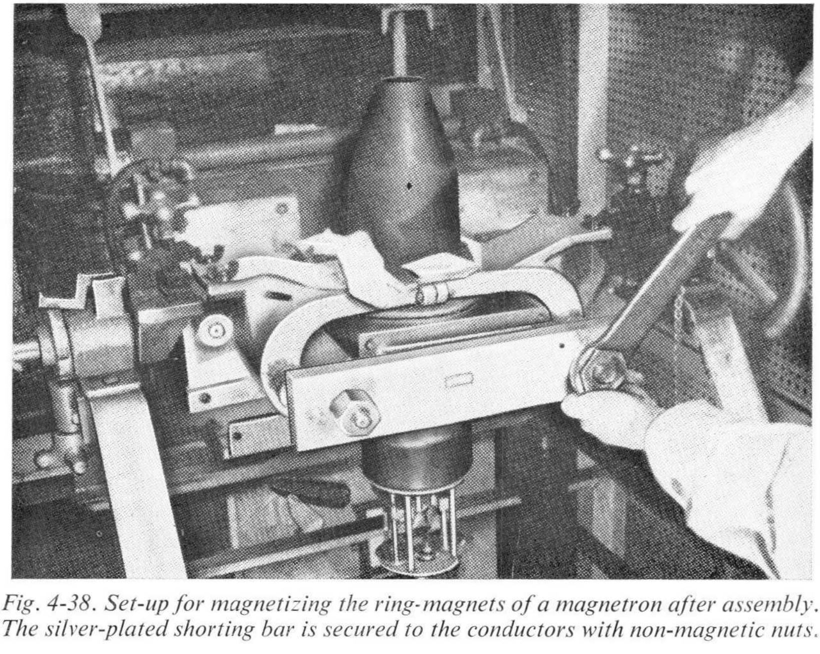

Fig. 4-38. Set-up for magnetizing the ring-magnets of a magnetron after assembly. The silver-plated shorting bar is secured to the conductors with non-magnetic nuts.

testing of magnets prior to assembling into the finished product. In carrying out this operation, the magnet is mounted on the equipment and a soft-iron keeper inserted into the air-gap to complete the magnetic circuit. Following application of the current pulse a reading is taken of the field strength of the magnet, enabling an assessment of the material and machining accuracy to be made.

4.6 Press Drive Control [6]

The use of ignitrons as electronic contactors for controlling large industrial draw presses derives indirectly from the demand for increased productivity in certain sectors of industry, and the current trend toward the automization of heavy industrial plant.

Earlier methods of press control involved the use of friction clutches to engage and slip a continuously running motor drive, later superseded by a system of gearing the motor directly to the crank of the press and controlling press operations by means of electromagnetic contactors. These methods are unsatisfactory since they necessitate frequent interruptions for running maintenance and impose severe electrical and mechanical stresses on both the motor and gear train, particularly during short-term precision operations such as inching the press when carrying out die set-up procedures.

An effective solution to these shortcomings is provided by the use of anti-parallel connected ignitron pairs in each phase of the three-phase input to the drive system, which act as contactors to control the press movements. This type of control obviates the need for large moving parts and enables static components to be extensively used, thus reducing maintenance to a minimum and giving long, noiseless and trouble-free service, with attendant reductions in loss of production owing to breakdowns or overhaul.

An advantage offered by ignitron tubes is the ability to control their mean value of output voltage simply by delaying the instant at which firing occurs (see ch. 3, sect. 3-4). This characteristic is utilized in press drive systems to give a cushioned start to the motor under full load conditions, by taking up the play in the gear train gradually. This avoids shock loading of the motor and the risk of damage to gears, shafts and keyways, which might occur if the full line voltage were applied directly. Moreover, the braking torque caused by the initial d.c. transient and

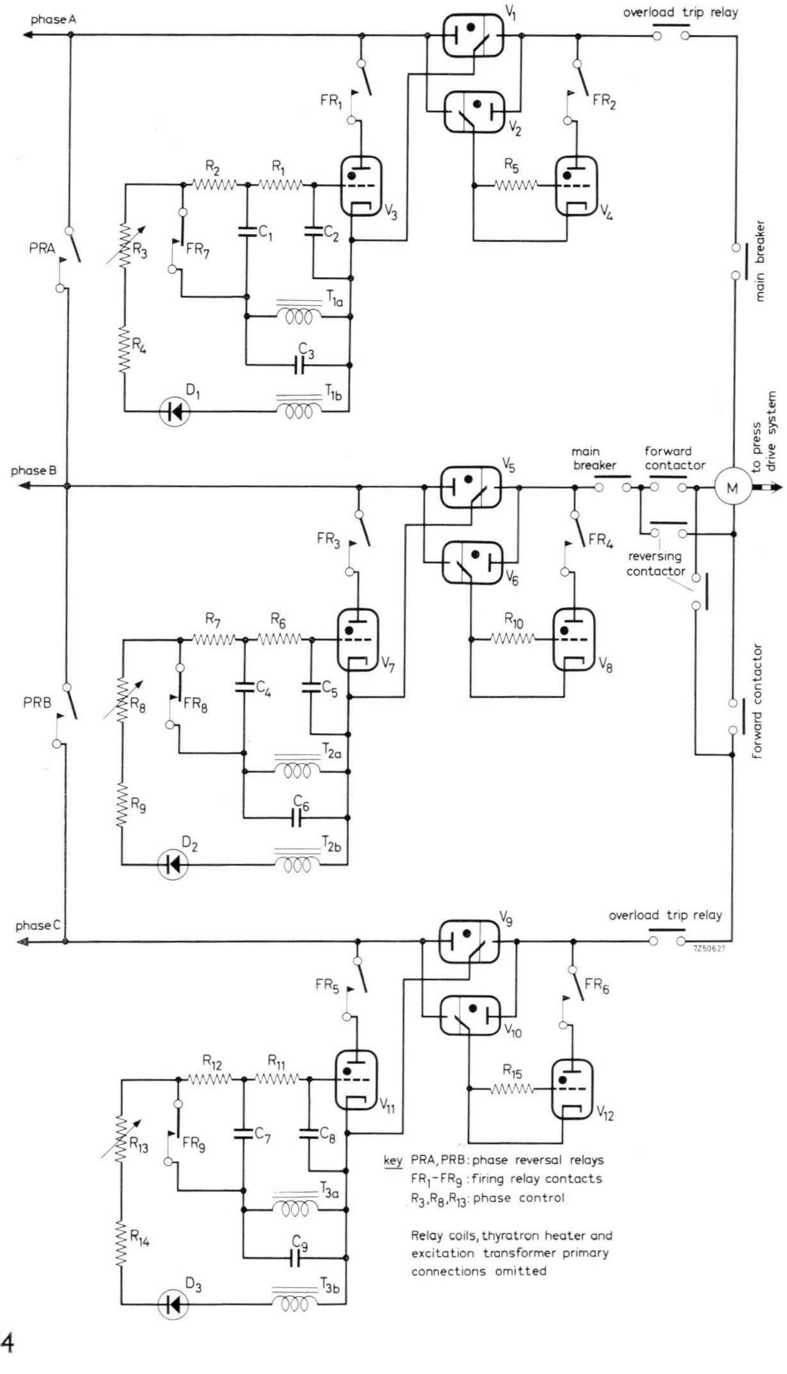

key PRA, PRB: phase reversal relays
FR_1–FR_9: firing relay contacts
R_3, R_8, R_{13}: phase control

Relay coils, thyratron heater and excitation transformer primary connections omitted the magnetic effects of current surges through the motor windings on starting, are considerably reduced. Press operations of greater precision are made possible by the use of small relays in the ignition circuits, which enable the press to respond more quickly to inching manoevres.

A simplified circuit of a three-phase ignitron-controlled system for directing an a.c. motor-driven draw press is shown in Fig. 4-39*a*. A pair of ignitrons fired by associated thyratron tubes are connected in anti-parallel in each phase. Ignition control is effected by relay *FR* (coil not shown) actuated by the operator, the relay contacts performing certain functions in each ignition circuit. At the commencement of press operations three of the ignitrons are fully conductive, whilst three operate initially under phase-controlled conditions to provide motor cushioning. Finally, the

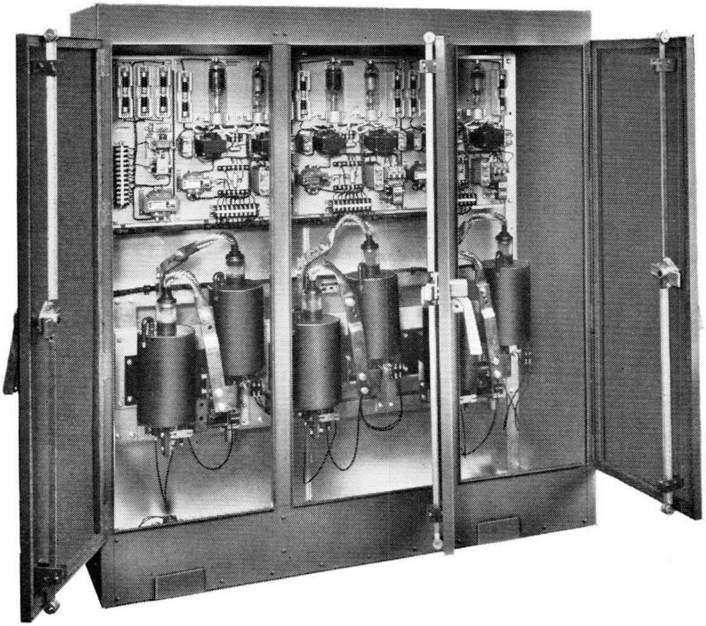

Fig. 4-39. (b) Main control cabinet housing ignitrons and ignition circuits.

---

opposite:
Fig. 4-39. (a) Simplified circuit of ignitron-equipped controller for driving an industrial draw press.

entire system is fired at full cycle conduction, maximum motor current thus being obtained.

A problem peculiar to the control of motors in this application is that of maintaining operation under off-load conditions, i.e. when the press is temporarily idling or during the regenerative part of its operating cycle. It is likely that the ignitrons are still required to conduct during this period, when only the off-load energizing motor current is drawn. However, the use of a highly saturated, large h.p. motor whose off-load energizing current forms a large percentage of that drawn at full load overcomes this problem, the high off-load current being of sufficient magnitude to ensure continued firing of the tubes. The ignition voltage available for successful firing is a function of the back e.m.f. developed in the running motor and the value of line voltage. Initially during starting and acceleration, this voltage is of a suitable value since the back e.m.f. is small because of the voltage drop across the high impedance motor windings. The difference between the back e.m.f. and line voltage at the full on-load running speed, should be sufficient to produce the necessary value of ignition voltage and permit satisfactory overall control. Fig. 4-40*a* shows the relationship between ignition voltage and current for correct firing. As soon as one tube reverts to its quiescent state, the difference voltage appears almost instantly to fire the other tube of the pair. Thus under these conditions firing of the self-excited ignitrons from the load is possible. When the motor h.p. is too low to provide the necessary conditions for reliable ignition, the ignitrons can be fired using the separate excitation method.

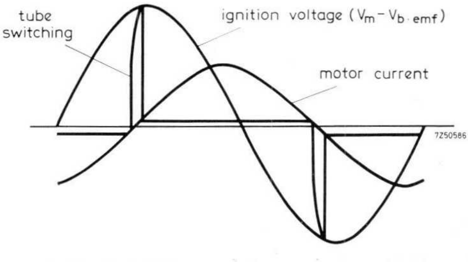

Fig. 4-40. (a) Waveforms showing voltage and current relationship for correct ignitron firing.

Specifications for industrial draw press drive systems normally require reversal of the motor direction of rotation, for the purpose of carrying out inching operations during die set-up procedures and for emergencies. An ordinary electromagnetic contactor is adequate for this function, which involves merely reversing the motor connections. However, by modifying the circuit of Fig. 4-39*a* it is also possible to perform the switching operation with ignitrons. When mechanically operated contactors are used it is important that they be connected in series with the main contactors, thus enabling the motor circuit to be interrupted in the event of ignitron failure, or welding or sticking of the main breaker contacts. The phase reversal relays *PRA* and *PRB* are necessary to preserve the proper interphase relationship at the input terminals so that the required phase control is obtained. Two automatically operated magnetic overload relays included in the motor circuit, protect the motor against large d.c. surges which may result from ignitron failure.

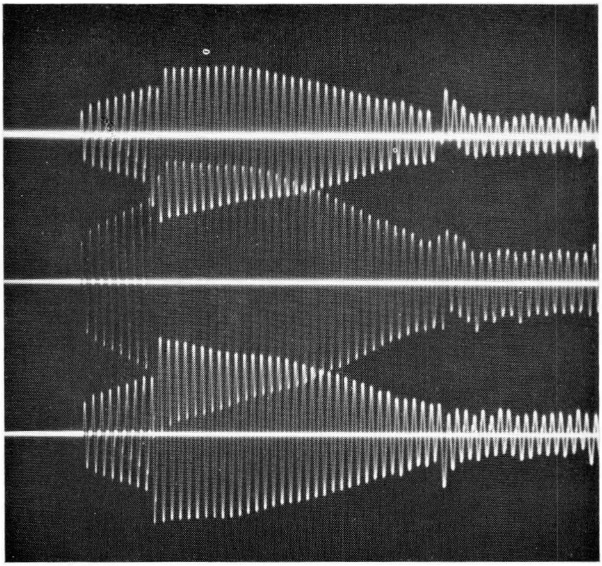

Fig. 4-40. (b) Oscillogram of motor accelerating current.

4.7 Electrolytic Purification of Water [7]

One of the most serious problems facing local and regional water boards in industrialized, densely populated areas, is that posed by the acute shortage of pure water to satisfy the demands of both industry and the domestic consumer. When large-scale purification of river, lake or sea water is required — the latter following desalination — conventional purifying systems involving a number of separate chemical treatments by filtration methods though satisfactory, are costly and space consuming. Moreover, the capacity of chemical filtration plant is very often unequal to the increased demands made during peak periods and prolonged dry spells.

An effective solution to these problems is provided by water electrolysing systems, using pulsed rectifier ignitrons to generate the high currents necessary for electrolytic purification. By electrolysis of iron plate electrodes immersed in the water, a chemical reaction takes place which results in purification of the water and the killing of all bacteria. A system of this type offers several advantages over biological filtering systems, notably a considerable reduction in the amount of space required to handle a given volume of water, and a proportionate lowering in overall costs.

A line diagram of a basic ignitron-controlled water electrolysing system is given in Fig. 4-41. In the drawing it can be seen that the electrolysing current is produced by four identical rectifier units, each containing six rectifier ignitrons. Each rectifier unit is capable of delivering a maximum current of 1200 A at voltages in the range of 70 to 300 V; the total current supplied by the four units when switched into parallel operation is 4800 A. In order to achieve maximum flexibility and optimum service from the installation, elaborate switching arrangements are necessary. These include isolators shown in the figure, which enable the h.t. supply to the rectifier units to be derived from either of two separate three-phase feed systems. In the event of failure of one supply the installation can be switched over to the other input, so that continuous operation is obtained. The main circuit breakers are each fitted with thermal and magnetic, automatically operated overload trips, which disengage the breaker to protect the installation should a fault appear or failure occur.

The rectifier units are supplied from mains step-down transformers in each branch, the delta connected secondary windings of which provide voltages of up to 380 V. The secondary voltage may be step-regulated down to 164 V in delta connection, or between 220 V and 95 V when a

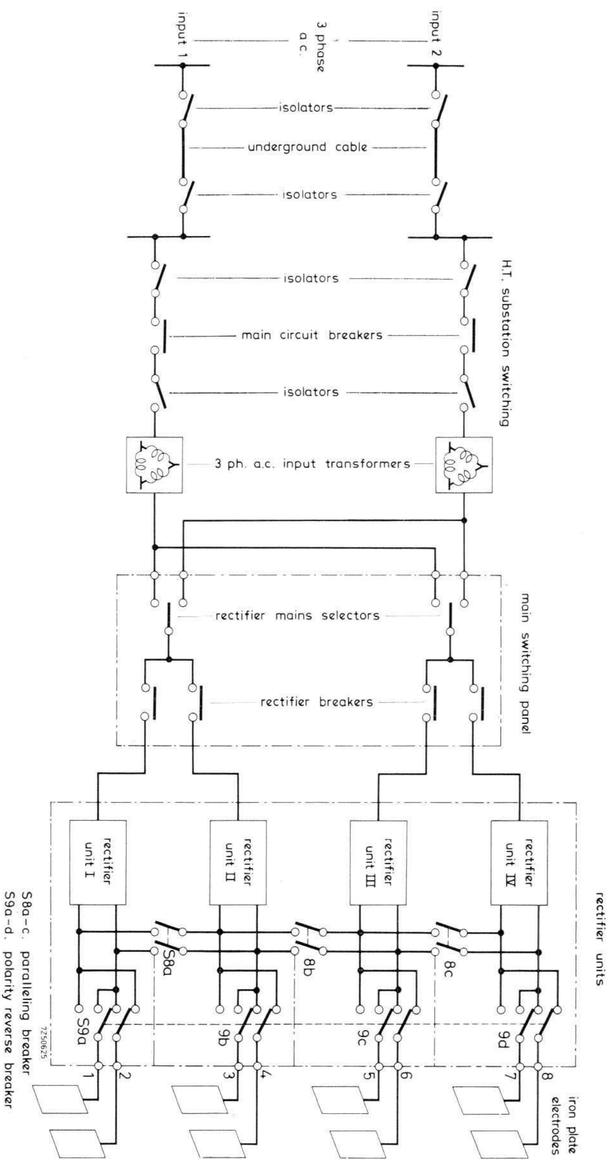

Fig. 4-41. Line diagram of an electrolytic water purification installation.

star configuration is used. The rectifier units are fed separately in two groups of two units each via a pair of tripolar selector switches on the main switching panel, which serve as primary interrupters for each group of two rectifiers and provide a choice of input supply, i.e. input 1 or input 2. Following the main switching panel the power transformers (Fig. 4-42 *a*)

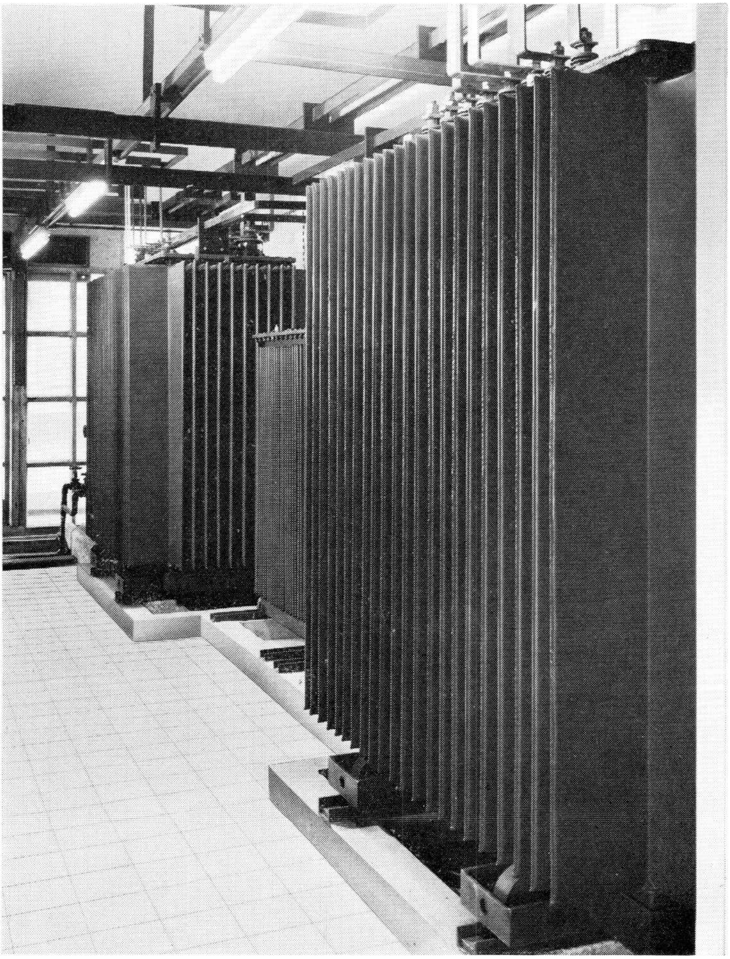

Fig. 4-42. (a) A pair of rectifier transformers and interphase transformer (centre).

associated with each rectifier unit, are fed via individual circuit breakers as shown. The rectifier transformers are of the double-star, three-phase type, having delta-connected primary windings and two star-connected secondaries which supply the six tubes contained in each unit (Fig. 4-42*b*). A centre-tapped interphase transformer is connected between the star points of each pair of secondaries. The d.c. output from each of the rectifier units is passed to a copper busbar system having ganged coupling breakers (S8*a*, *b* and *c* in Fig. 4-41) interpolated between each set of output bars. The switches permit paralleling of the outputs so that the purifying baths can be supplied from any combination of rectifiers, or from one alone if so desired. Polarity reversing breakers (S9*a*, *b*, *c* and *d* in Fig. 4-41) interposed in series between the rectifier outputs and the baths, control the direction of current flow through the electrolysing electrodes.

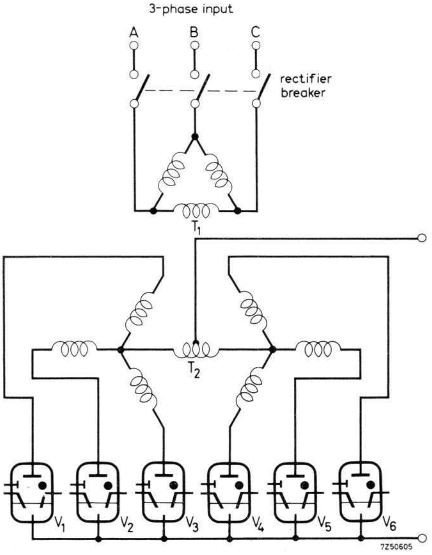

Fig. 4-42 (b) Circuit of basic six-phase rectifier unit.

The electrodes consist of treated iron plates, eight in number, which are fully immersed in the water, one electrode being sufficient to purify the contents of one bath. Following electrolysis the water is subjected to final purification treatments prior to distribution. These comprise a flocculation filter containing an aluminium sulphate compound which removes any remaining precipitant, and sand and gravel filters which complete the process. (Fig. 4.43).

Fig. 4-43. General view of water purification room showing sand and gravel and flocculation filters.

A single rectifier unit consists of the following basic elements:
— main rectifier circuit
— ignition circuits
— protection circuit against arc-back
— ignitron auxiliary anode circuits
— tubes' water cooling system
— control circuit.

A partial view of a water-electrolysing installation is shown in Fig. 4-44*a*. Rectifiers 1 and 2 can be seen on the left, and a section of the main switching and instrument panel at the rear of the photograph. Fig. 4-44*b* is a close up of a rectifier cabinet, showing the disposition of the instruments which monitor the rectifier operating voltages and currents, and output electrolysing current to the immersed electrodes. The

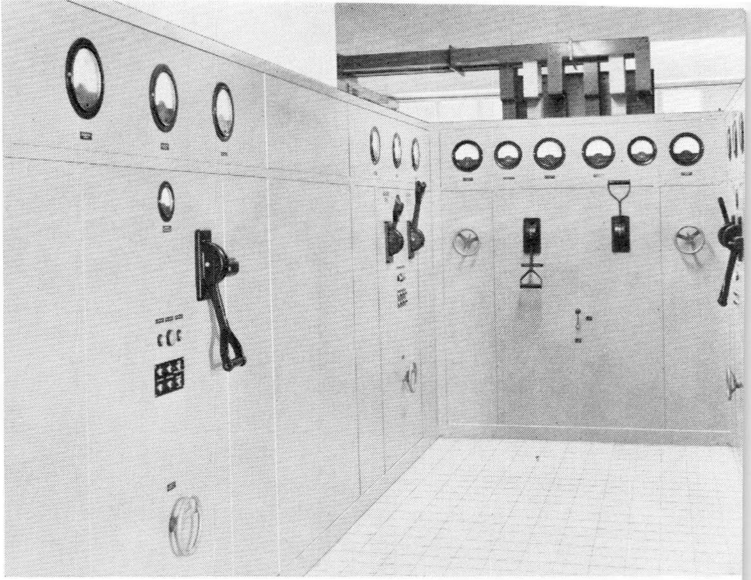

Fig. 4-44. (a) Partial view of water electrolysing installation: two rectifier bays can be seen on the left whilst the main switching panel is located at the rear of the photograph.

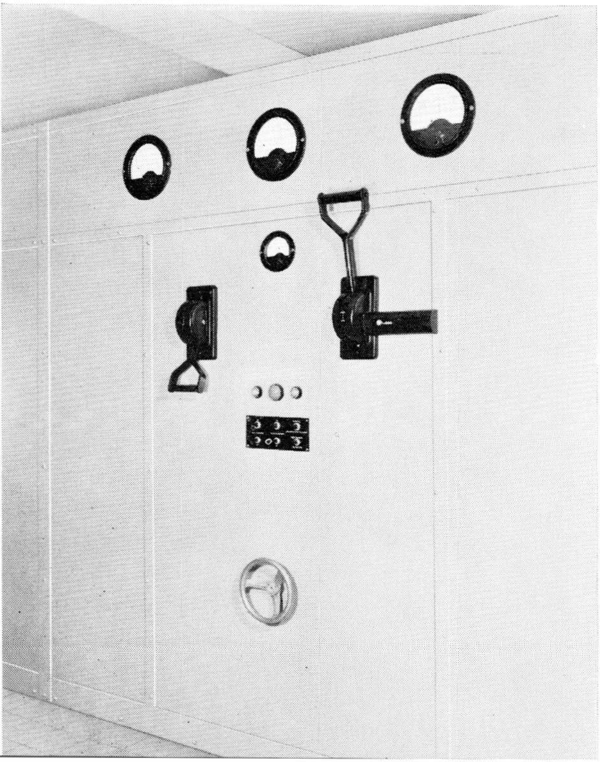

*Fig. 4-44 (b)
Close-up of a rectifier bay.*

paralleling and polarity reversing breakers are also shown. A number of pilot lamps give visual indications of the condition of certain auxiliary supplies and provide a warning of the occurrence of arc-back. The control wheel at the lower part of the panel governs the ignitrons' phase control angle and thus the value of rectified output voltage.

4.8 Dielectric Forming in Electrolytic Capacitors

Rectifier ignitrons have proved to be particularly useful in the manufacture of such electrical components as dry electrolytic capacitors. In this application the tubes deliver voltages of up to 750 V d.c., which are used in forming a thin dielectric film of aluminium oxide on lengths of aluminium foil. The processed material is cut into slices of various dimensions, which are used as the anode electrodes in the construction of the capacitors.

The capacitor dielectric is formed by electrolysis of the metal foil in a large, sectionalized stainless-steel tank (Fig. 4-45), the main compartment of which is filled with a solution of distilled water and chemicals. During the forming process the foil is passed through the different tank compartments or baths, each of which fulfils a specific function.

A d.c. voltage is applied to the foil which is unwound from a large roll of uniform width, so that the material itself constitutes a positive electrode whilst the steel tank is the negative pole. The roll of foil is driven at a constant speed by a motor primary drive, the foil being drawn through the tank by chain-driven rollers. The speed of the foil during forming is set appropriate to the available power, whilst the magnitude of the applied voltage is governed by the dielectric thickness and strength required for the finished material. The length of foil describes a V-shaped path through the tank compartments, a roller at the base of each compartment around which the foil is passed ensuring that the material is fully immersed in the contents thereof.

The use of ignitrons in an installation of this type has many advantages. Notably, the ability of the tubes to withstand transitory short circuits across the load caused by foil punctures and because of the tubes' low arc voltage, the relatively small losses incurred during operation.

The aluminium foil normally undergoes four separate operations during the forming process. Initially it is subjected to boiling in the first

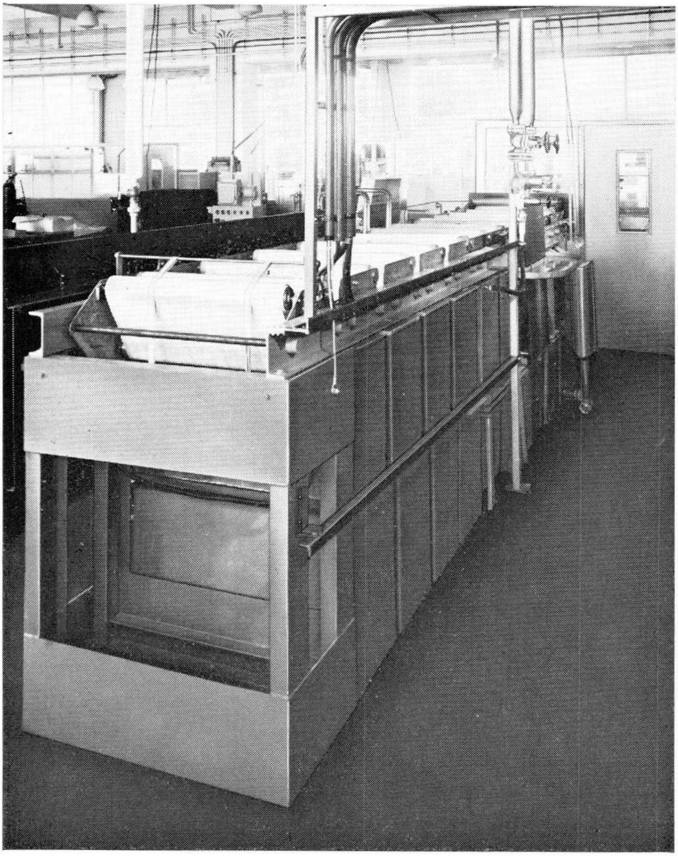

Fig. 4-45. Dielectric forming machine. A length of aluminium foil is passed through the various baths during the forming process.

compartment, which rids the material of any surface impurities before it is passed to the main forming bath. In order to stimulate electrolytic conduction, a solution of boric acid and ethylene glicol is added to the contents of the forming bath. During electrolysis a chemical reaction takes place, oxygen ions travelling to the positive pole causing a thin film of aluminium oxide to be formed on the surface of the foil. The thickness of the film so formed may, for example, be in the order of 10^{-5} cm.

During the initial stages of forming the resistance between the foil and the tank is relatively small, so that the voltage across the forming bath is also low. However, as the oxide layer forms on the foil surface the voltage gradually increases until finally the maximum value is reached, whence an intense electrostatic field exists in the area between the foil and the sides of the bath. After forming the foil passes through a further cleansing stage where final washing is carried out. In the last operation the foil is passed over a number of high power lamps, which dry the material before it is wound onto a collecting spool.

A block diagram of a forming installation is given in Fig. 4-46*a*. The electrical equipment employed comprises basically a continuously stabilized, automatic driver unit, the ignition circuit, and three rectifier ignitrons one each connected in the phases of a 10 kV, three-phase supply. Facilities for manual control of ignitron firing are also provided.

The driver unit consists essentially of a pair of voltage-stabilized d.c. amplifiers, supplied from an auxiliary three-phase source. Part of the rectified output to the forming tank is fed back to the input of the d.c. amplifiers, where it is compared with the preset, stabilized reference voltage applied to the grids of the tubes. This has the effect of neutralizing any alterations in the supply or load voltage so that the operating conditions of the ignitrons remain substantially constant.

With the system switched to automatic operation, the ignition control pulses applied to the ignition circuit are derived from a "horizontal" control circuit comprising a variable phasing transformer supplied from the auxiliary supply, and peaking transformers connected in each phase. The pulses developed across the secondaries of the peaking transformers are amplified and shaped over a stabilized, two-stage amplifier, before passing to the ignition circuit. The phasing transformer selects the required phase control angle for firing the ignitrons at the correct instant, thus affording accurate control of the rectified output voltage (Fig. 4-46*b*).

Ignition is of the separately-excited type, the ignition control element in this example being a special type of mercury vapour rectifier having three separate anodes and grids. A negative voltage derived from a transformer in an associated protection circuit, is fed as bias to the grids of the control tube. The ignition pulses are sequentially applied to the grids of the control tube, discharging a capacitor connected in each anode circuit. The discharge firing pulses from each capacitor are coupled to the igniter of each ignitron via transformers, the primaries

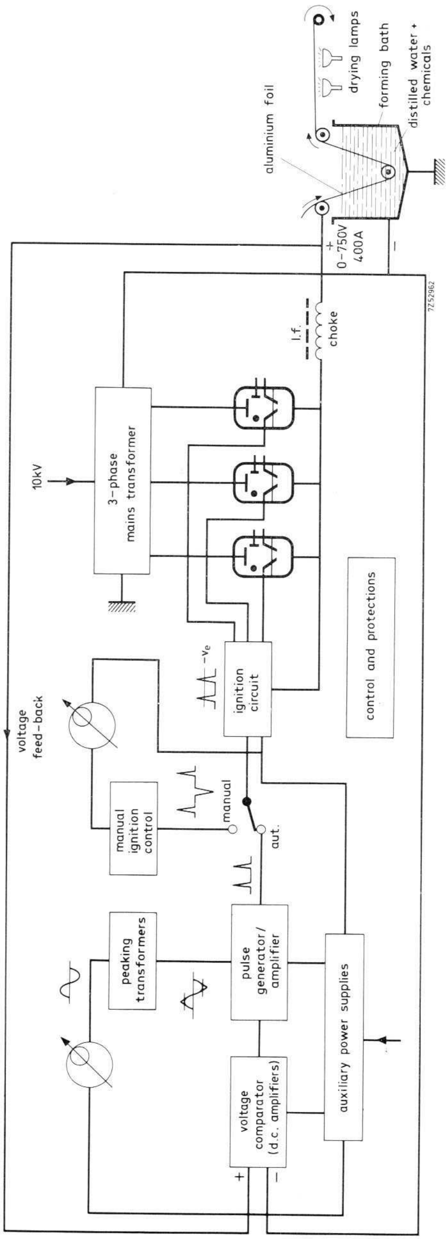

Fig. 4-46. *(a) Block schematic diagram of basic dielectric forming installation.*

of which are connected in series with the anodes of the control tube. The purpose of the transformers is to isolate the igniters of the non-operative tubes from the ignition circuit during firing, thereby ensuring

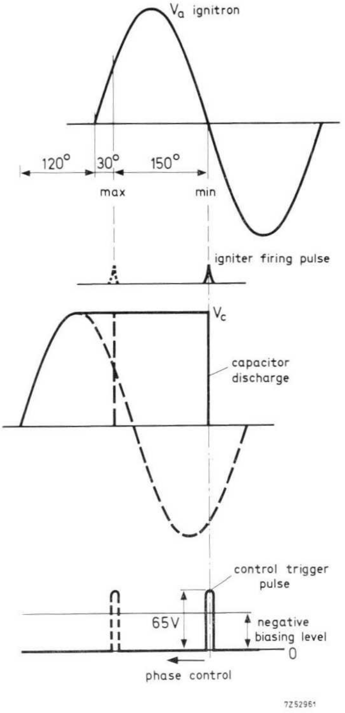

Fig. 4-46 (b) Waveforms showing relationship between capacitor voltage V_c and trigger pulse applied to grid of ignition control tube.

that the tubes are fired in the correct sequence. A large l.f. choke connected in series with the positive d.c. rail and the inherent high capacitance of the forming tank, together form a filter which provides smoothing of the output voltage.

Comprehensive "fail-safe" facilities are provided, which afford protection of both the equipment and operating personnel. In the event of ignitron arc-back the l.f. choke limits the capacitive feed-back current which occurs. Relays operated in conjunction with diodes in series with each igniter, safeguard the igniters in the event of incorrect functioning of the ignition circuit, whilst *RC* filters connected between anode and cathode of each ignitron suppress current transients. Provision is made

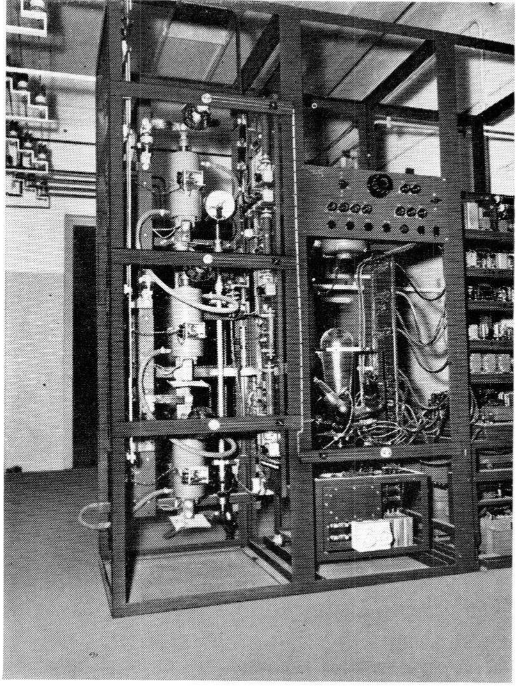

Fig. 4-47. (a) Rack housing ignitrons and ignition and driver circuits.

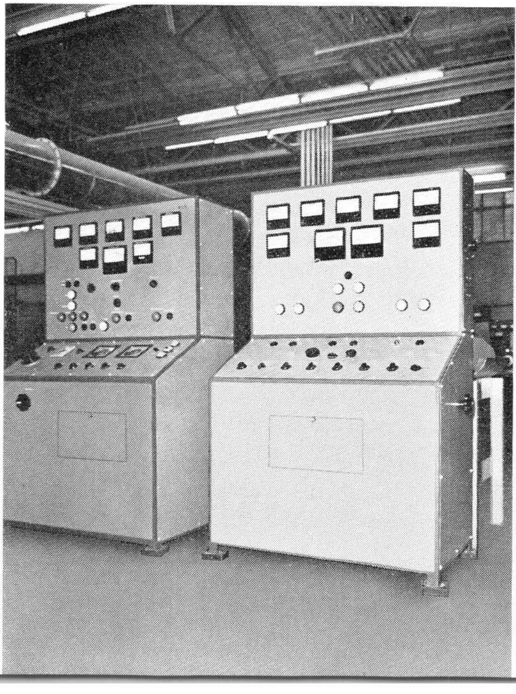

Fig. 4-47 (b)
View of control consoles.

for preventing further ignition when short-term arc-back currents occur, by a gas-filled tube which is caused to strike, resulting in an increase in the negative bias voltage applied to the grids of the control tube so that the tube is cut off.

By employing two separate rectifier units each containing three ignitrons and an associated control tube, a more even dielectric film is obtained with a considerably improved finish. In an installation of this type, one of the rectifier units delivers the full d.c. forming voltage to the foil via the drive roller in the normal manner (see Fig. 4-46*a*). The voltage supplied by the second rectifier unit on the other hand, is approximately a half of that applied to the foil and is passed to a pair of electrodes in the forming bath, positioned either side of, and parallel to the metal foil. A second forming operation is often carried out in this type of installation.

Dielectric forming equipment supplied by ignitrons have given excellent service for a number of years, a high average number of rolls of aluminium foil being processed daily. The latest equipment of this type is fitted with thyristor ignition control.

4.9 Fish Migration Control [8]

A novel application for ignitrons is in salmon and trout fisheries where the tubes are used to pulse an underwater electric fence. D.C. pulses are sequentially fed to the fence electrodes to guide the fish clear of hydro-electric turbines and other obstacles, into the right channels for the migratory journey to and from their breeding grounds. In the construction of dams and hydro-electric power schemes, diversionary tunnels are frequently used to by-pass the flow of water; since the velocity of the water flow is high, the migrating fish are unable to swim against the current. An electric fence can then be employed to direct and shepherd the fish into specially constructed traps where they are caught and transported in fishtanks, to a point further upstream where they can resume their journey in comparatively calmer waters. Fish staircases can alternatively be used to help the fish overcome the obstruction.

The pulse source consists essentially of a number of ignitron pairs deriving their energising supplies from a d.c. generator, and a single control or turn-off ignitron with an associated switching capacitor, connected across the generator output busbars. A simplified circuit of the pulse generating system showing only one load ignitron is given in Fig. 4-48*a*. In the circuit, when tube V_1 is fired a pulse is delivered to the immersed electrodes forming the ignitron load, the load current building up in a time $t = LR$ secs, where L is the motor armature inductance and R the total circuit resistance. To terminate the pulse, tube V_2 is fired to charge the commutating capacitor C; in this condition the control tube V_2 and capacitor C are effectively connected in parallel across load ignitron V_1. Since the capacitor is already charged by an auxiliary charging source comprising transformer T and diode D to a potential approximating that of the generator output, the voltage on the generator positive rail is driven momentarily in a negative direction, sufficient to de-ionise and turn-off V_1. Fig. 4-48*b* shows the waveforms of the output pulse applied to the fence electrodes and voltage across the generator terminals. A noteworthy advantage of this method is the ability to control the various ignitron-powered sections of the fence load, with only one regulating ignitron and a single associated capacitor.

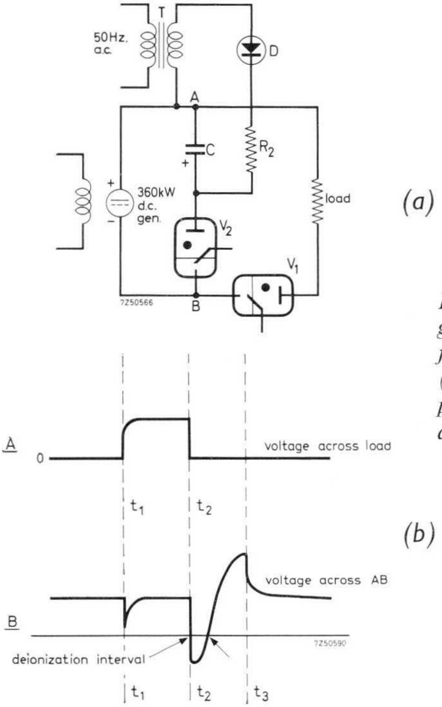

Fig. 4-48. (a) Basic circuit of pulse generating system for electric fish-fence.
(b) Waveforms showing pulse applied to fence load (A) and voltage across generator terminals (B).

A block diagram of the basic control system is given in Fig. 4-49.

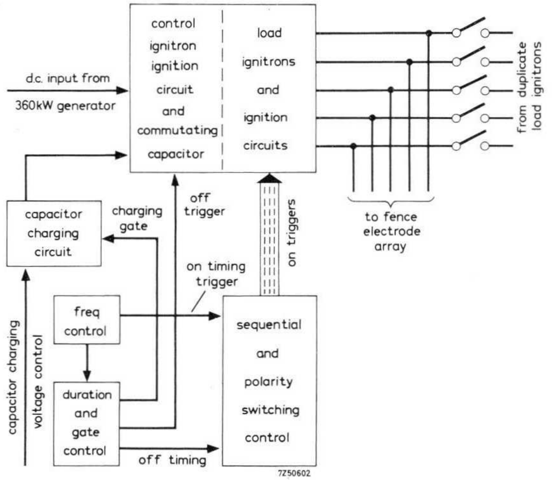

Fig. 4-49. Block schematic diagram of electric fence control system.

Five separate pairs of load switching ignitrons are employed, each pair being connected to a group of four electrodes, the number of electrodes making up the fence array totalling twenty. The load ignitrons are fired sequentially so that the pulses are applied to successive bunches of electrodes rather than to all of them simultaneously, thus creating a moving pattern of electric charges which impels the fish to swim in the direction desired. The ignitron pairs can be interconnected into different configurations by means of jumper leads, and fired in several different sequences or combinations in order to obtain the electrical pattern required to urge the fish in a particular direction. The firing sequences

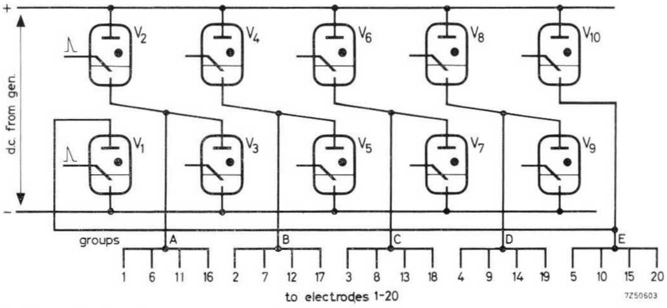

Fig. 4-50. Simple load ignitron configuration for producing pulse sweeping effect.

may be varied by altering the interconnections between the individual plug-in circuit elements which constitute the polarity and sequential switching control assemblies.

Fig. 4-50 shows a simple firing arrangement where one pair of tubes is fired at a time to produce a pulse sweeping effect across the length of the fence. In this example the individual numbered electrodes in each group are pulsed numerically at intervals of five along the fence. Thus when ignitron pair V_1 and V_2 are ignited at the beginning of the sequence, electrodes 1-5-6-10-11-15-16 and 20 are pulsed, followed by 1-2-6-7-11-12-16 and 17, 2-3-7-8-12-13-17 and 18, 3-4-8-9-13-14-18 and 19 and finally 4-5-9-10-14-15-19 and 20 to complete the sweep pattern. The system incorporates comprehensive automatic safety devices which guard against overloads, and is provided with standby facilities which enable a duplicate series of load ignitrons to be switched into service in the event of a failure or during overhaul.

An operational electric fish-fence using a W-shaped array is shown in Fig. 4-51 whilst another type some 32 m (105 ft) long and 12 m (40 ft) high is shown under construction in Fig. 4-52*a*; the fish traps may be seen at the left of the photograph. The completed fence is shown in operation in Fig. 4-52*b*. A fence of this type has given encouraging

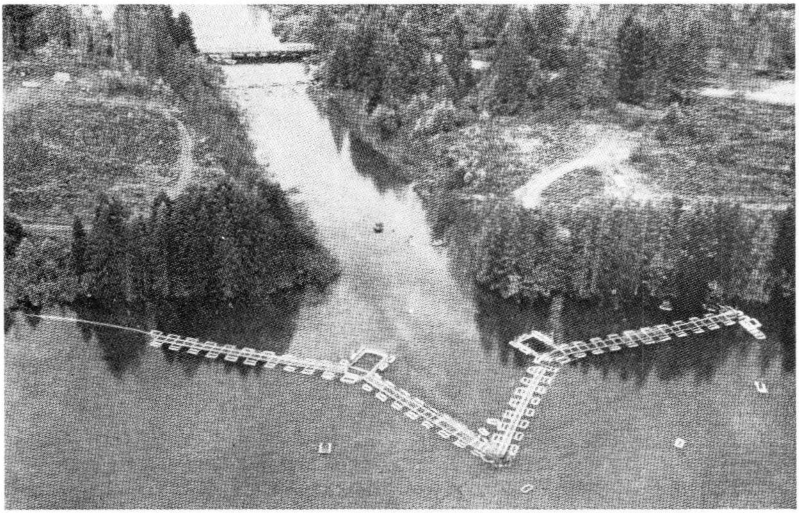

Fig. 4-51. W-shaped electric fish-fence.

(a)

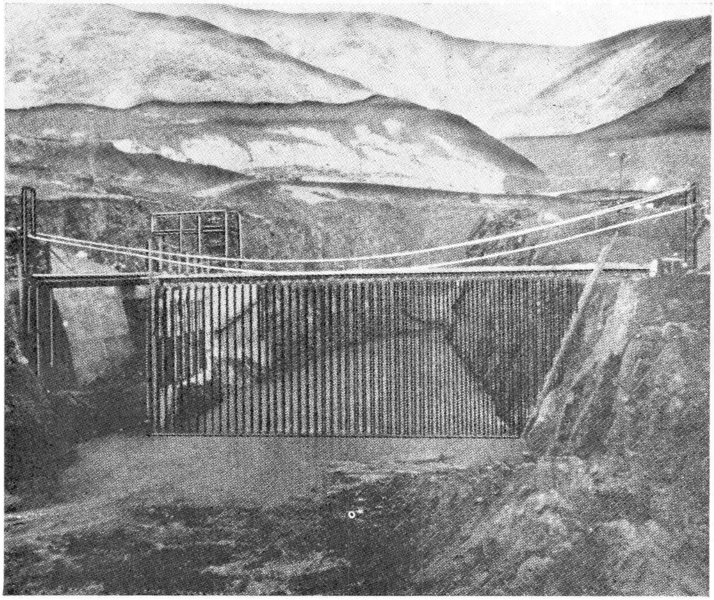

Fig. 4-52. (a) Electric fence during construction; (b) Completed fence in operation.

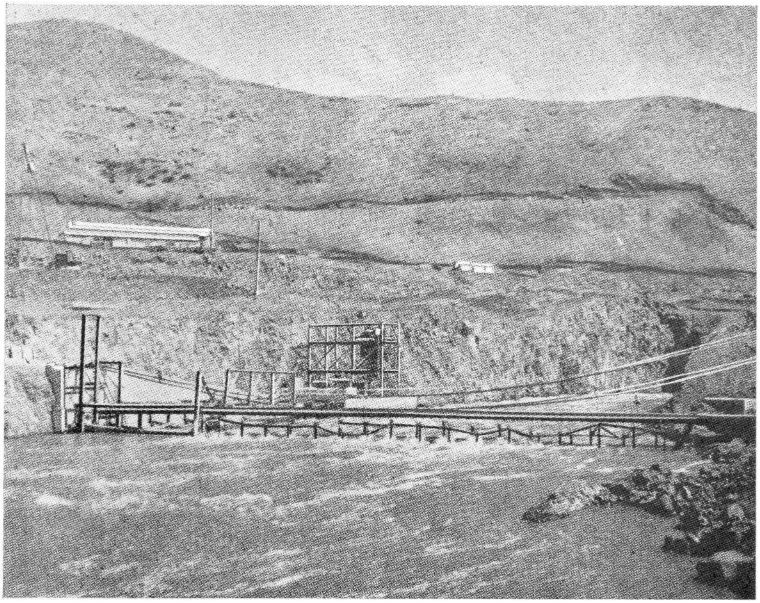

(b)

results over a number of years, successfully diverting some 16000 salmon and trout into the safety of the fish-traps within the space of a few months, which indicated an effectiveness of 90%. Thus by employing a relatively simple and practical fish diversion and control system based on the electric fence principle, a major contribution is made to fish farming technique and fishery management.

4.10 Electronic Sintering of Materials

A considerable measure of success has been obtained with equipment using pulsed ignitrons, designed for the sintering of materials such as molybdenum and tungsten. Since the material to be sintered is, in its raw state, composed of finely divided powdered metal, it is necessary to change it into a more workable form before carrying out the sintering process. This is accomplished by special presses and furnaces which compress and bond the metal powder into rods of uniform length, which can be easily mounted in the sintering apparatus.

The mounting arrangements differ with the size and nature of the material to be sintered. For example, when it is required to sinter tungsten rods of relatively large dimensions it is necessary that the rods be processed separately, since to obtain optimum results the full load current must be passed through them. Each rod is mounted vertically in the equipment and held firmly in place by a pair of large cross-section — tungsten — electrodes. To compensate for shrinkage and contraction of the material during the sintering process, a counterpoise slightly lighter than the workpiece is suspended via a pulley block from the movable lower electrode. This ensures that the rod is kept in position throughout the sintering operation. A cylindrical water jacket is lowered at the beginning of the operation, completely enclosing the mounted rod so that a sintering "bottle" is formed (Figs. 4-53*a* and *b*). Cooling water is continuously circulated through the jacket during and after the sintering process, so that the heat dissipated is conducted away and the temperature of the sintering area kept within safe limits.

An important requirement of the sintering process is that all impurities in the form of gases such as oxygen, be removed from the immediate area of the workpiece. The presence of quantities of oxygen is moreover dangerous at such high operating temperatures (2000-2600 °C). It is thus necessary to remove all gas from the interior of the sintering bottle before and throughout the sintering process. This is effected in the initial

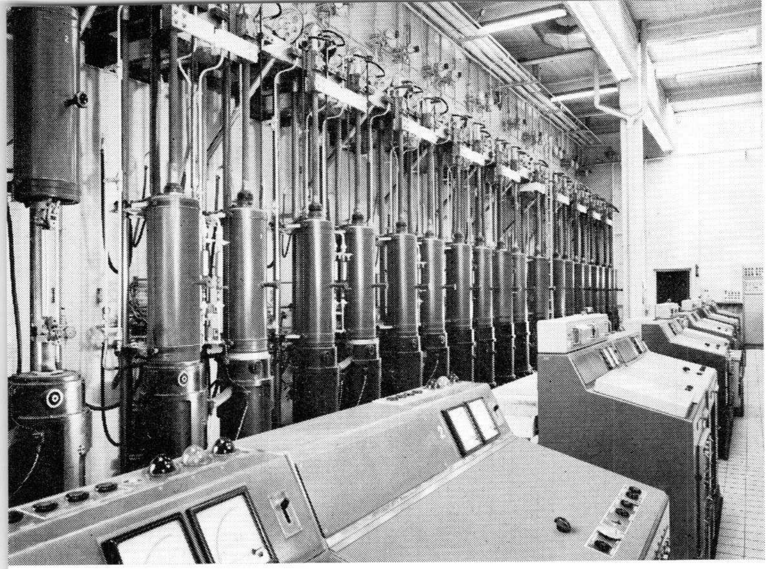

Fig. 4-53. (a) General view of sintering installation showing sintering bottles (at left) and electronic programming consoles (right).

Fig. 4-53 (b) Close up of sintering bottle with water jacket raised. A tungsten rod is shown mounted in position ready for the sintering process.

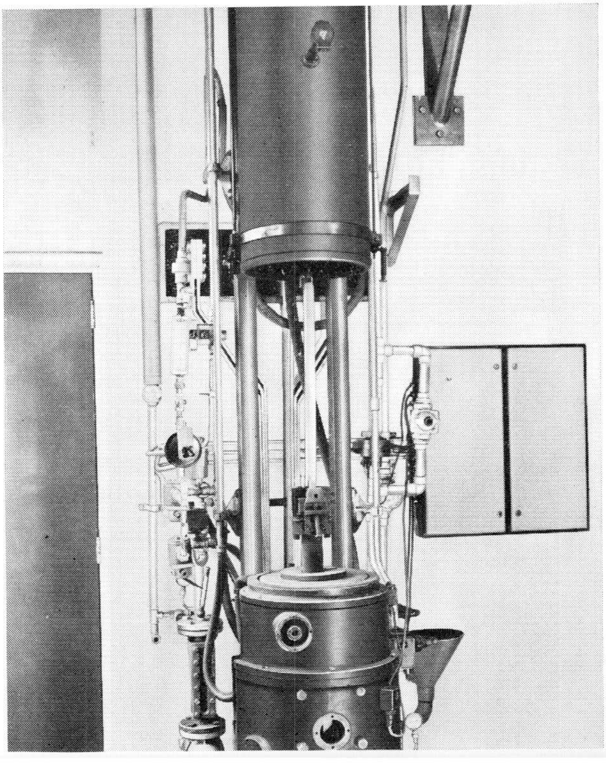

stage of the sintering programme by pumping hydrogen into the enclosed area at a high rate of litres/min. The unwanted oxygen is driven out through a small pipe at the top of the water jacket, an atmosphere of pure hydrogen being formed. The injection of hydrogen during this operation, known as "rinsing", is reduced to a lower, constant rate at a later stage in the programme.

The sintering equipment (Fig. 4-54) comprises basically an electronic programming unit which controls the magnitude and duration of current flow through the workpiece, and a current regulator incorporating a transductor, which affords accurate, continuous control of ignitron firing. This is followed by a current driver which magnifies and integrates the ignition current pulses, and finally the ignition circuit and a pair of anti-parallel connected ignitrons. Separate-excitation is employed, a thyratron tube providing the required short duration firing pulses of 450 V amplitude for the igniters. When fired the ignitrons deliver pulses of 2 kV to the primary of the output transformer, giving rise to secondary current pulses of up to 15 kA flowing through the workpiece, a peak output power of approximately 470 kVA being obtained.

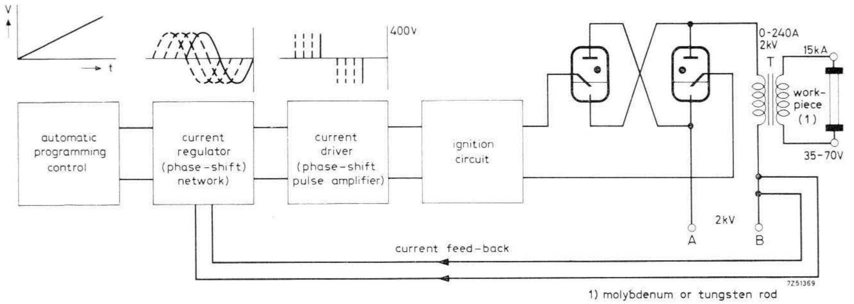

Fig. 4-54. Block diagram of basic electronic sintering equipment.

The sintering process follows a stringently controlled sequence, the workpiece being passed through a step-regulated heating cycle. The programming unit automatically controls the hydrogen pumping rate and the slope and level of load current, the latter being gradually increased in three separate steps up to the maximum required value. In the first programmed operation (ref. Fig. 4-55*a*), gas is driven out of the sintering area by the injection of hydrogen at a continuously controlled rate. Following a time t_1 the hydrogen pumping rate is reduced to a

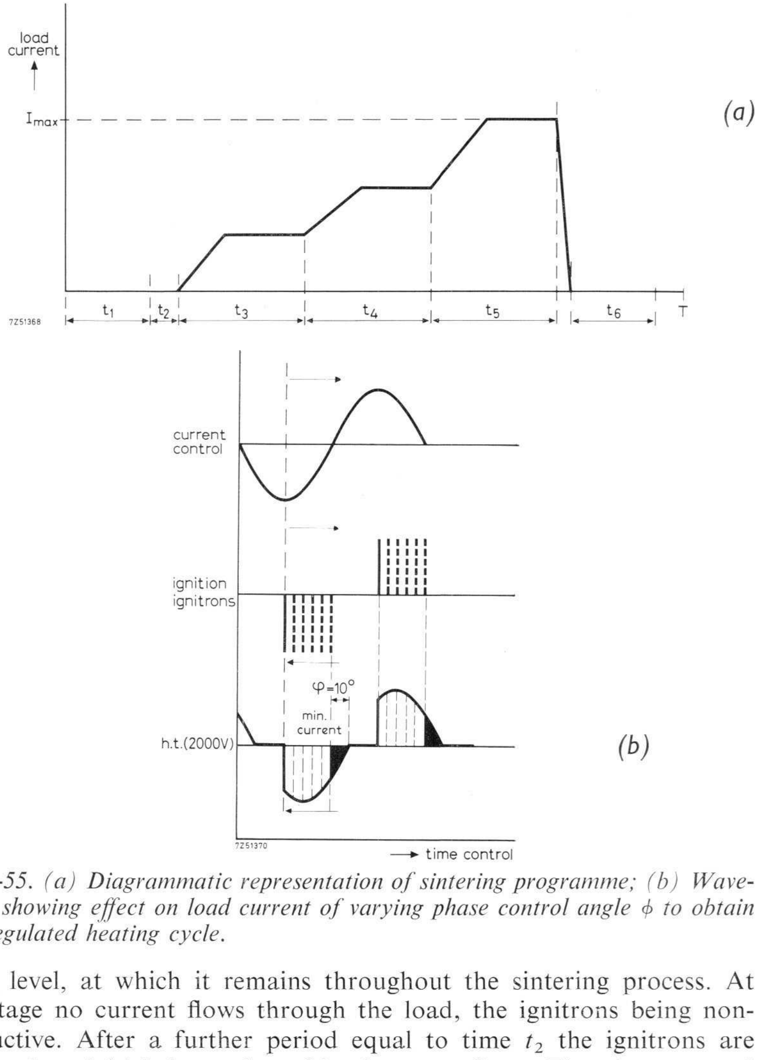

Fig. 4-55. (a) Diagrammatic representation of sintering programme; (b) Waveforms showing effect on load current of varying phase control angle ϕ *to obtain step-regulated heating cycle.*

lower level, at which it remains throughout the sintering process. At this stage no current flows through the load, the ignitrons being non-conductive. After a further period equal to time t_2 the ignitrons are fired and an initial, low value of load current flows. The phase control angle of the tubes is then altered so that the current gradually rises to a certain specified value at which it remains for a time t_3. During this period hardening of the workpiece takes place. The current is then increased to a higher level where it is held for a further period t_4, whence

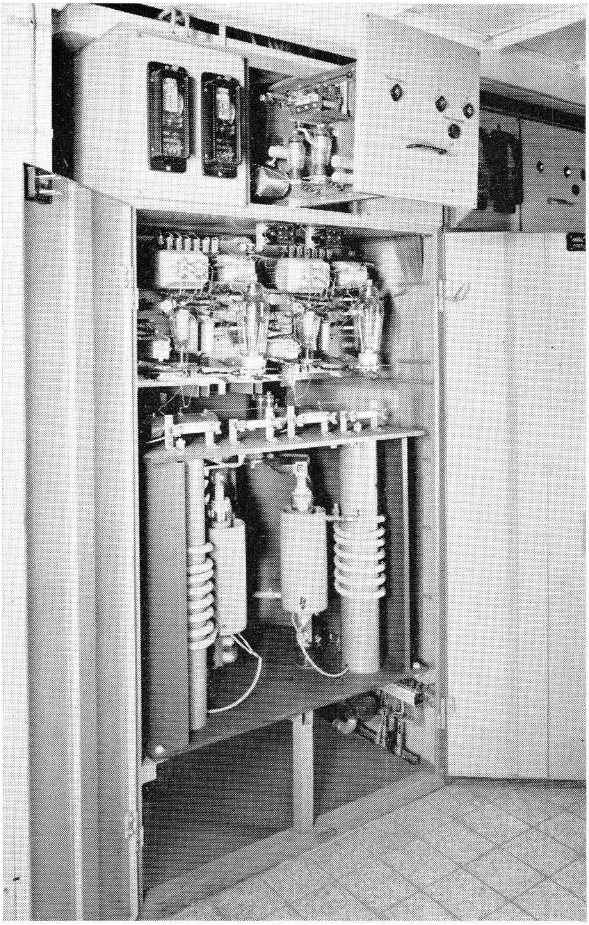

Fig. 4-56. (a) View of cabinet housing ignitrons, control, driver and ignition circuits.

any latent gas in the material is liberated and driven out through the outlet pipe. The load current reaches its maximum value within a time t_5, during which final hardening is carried out and the material given a high tensile strength. The injection of hydrogen continues for a further period t_6 in order to remove any remaining liberated gases from the vicinity of the workpiece. An interval of several minutes is then normally allowed for the workpiece to cool down.

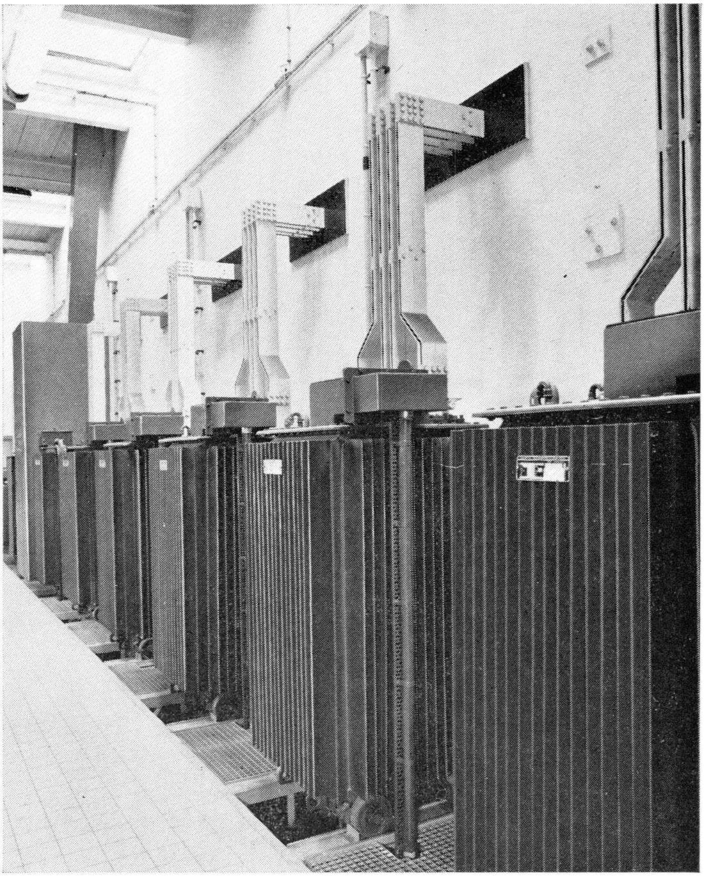

Fig. 4-56 (b) Three-phase power transformers.

Adequate safety provisions are included, which ensure that the equipment is immediately shut down in the event of an ignitron omission or a failure occurring elsewhere in the system. Several identical sintering machines can be connected in parallel between the phases of a three-phase supply and operated simultaneously, thus considerably increasing output of the refined material. Equipment of this type has provided reliable, trouble-free service whilst working under conditions of almost continuous duty over a period of some four years. During this time very few ignitron omissions or equipment failures were experienced.

4.11 Scientific Research [9,10]

A significant contribution is made by ignitrons in furthering research studies into the nature and behaviour of matter under different simulated conditions. In experiments involving the control of nuclear fusion reactions for example, the tubes are used to switch the large, short-duration pulses of magnetizing energy and provide ohmic heating, in special apparatus such as stellarators. When connected in a suitable rectifier configuration, the tubes can be used to provide the high d.c. potential necessary in generating the strong electric and magnetic fields, required for accelerating charged particles in linear or circular accelerators. Another use for these tubes is in cryogenics where they can be employed to control the intense magnetic fields ($\approx$100 kilogauss) required in certain low temperature experiments, when cooling by the adiabatic demagnetization process. In order to give the reader a more complete idea of the important role played by ignitrons in research of this kind, the application of the tubes in controlled nuclear fusion experiments and studies devoted to the control of hot gas plasma, where they are used in conjunction with large capacitor banks and stellarator apparatus, is now described.

In trying to control nuclear fusion reactions an attempt is being made to harness the tremendous release of energy which occurs. Thus far thermonuclear reactions, which take place at temperatures around 100 000 000 °C, have been obtained only in the hydrogen bomb and are found in natural phenomena such as the sun and stars. However, with the aid of stellarator apparatus scientists are attempting to simulate the conditions necessary for a nuclear reaction to take place, the results obtained from the different experiments being carefully evaluated.

The element used in creating the nuclear fusion or reaction is *deuterium* a heavy isotope of hydrogen, whose atomic structure consists of a nucleus containing one proton and neutron and a single orbiting electron. Three successively different reactions can occur: in the first, two deuterons or deuterium nucleii unit to form helium-3 and a neutron, the atomic reaction being accompanied by a release of energy. In the second reaction two deuterons combine to form a tritium nucleus and one proton; tritium is another isotope of hydrogen having two neutrons in its nucleus. A single deuteron combines with the tritium nucleus to form helium-4 and one neutron in the third reaction, a release of energy again occurring.

The benefits to be obtained from controlled nuclear reactions are twofold: principally, the opening of new horizons made possible by harnessing the tremendous burst of released energy and secondly, the commercial potential of the by-products produced. Moreover, the raw deuterium used in producing the reaction is relatively common compared to the scarcity of the materials required in nuclear fission reactions.

A stellarator or stellar generator, so called because of the high stellar temperatures which the apparatus generates, may be briefly described as a device in which ionized gas or plasma is confined in an endless tube of figure-of-8 or oval shape, by a very strong, externally applied magnetic field. A high field strength in the order of 50 000 gauss is necessary, because no physical container is capable of withstanding the extreme temperatures involved; in one type of stellarator a current of 10 kA at 24 kV is generated to create the confining magnetic field. Deuterium gas is injected at low pressure into the evacuated tube, and is contained by the magnetic "bottle" formed by the confining magnetic field. At high temperatures the deuterium atoms are stripped of their electrons, the remaining protons and neutrons forming what is known as plasma.

A schematic diagram and photograph of a typical figure-of-8 stellarator are given in Figs. 4-57*a* and *b* respectively, whilst Fig. 4-58 illustrates another oval-shaped type called a race-track stellarator. The latter type has two sets of magnetic windings: the main confining windings and secondary helical windings. The helical windings prevent the plasma stream from being dissipated across the diminishing magnetic gradient, which extends radially from the centre of the torus. Fig. 4-59*a* shows a practical charging and firing arrangement for supplying the voltage and current required for the build-up of the stellarator magnetic field. The circuit employs mercury vapour tubes for charging a large capacitor bank (C_n), and ignitrons which control the discharge sequences. The

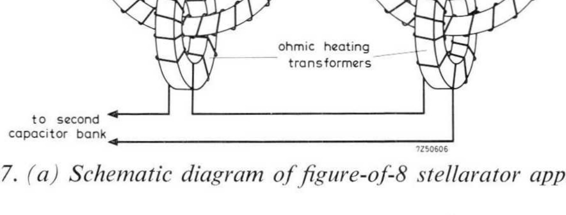

Fig. 4-57. (a) Schematic diagram of figure-of-8 stellarator apparatus;

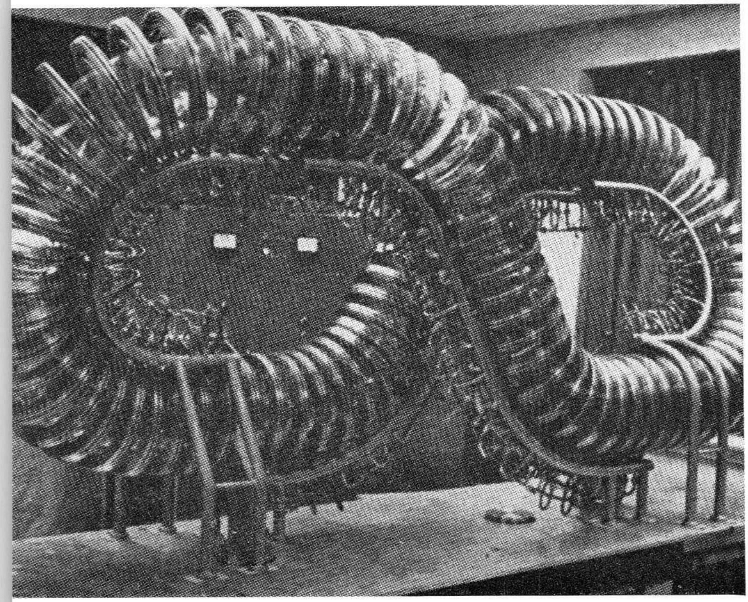

Fig. 4-57 (b) Figure-of-8 stellarator.

Fig. 4-58. Oval-shaped or race-track stellarator.

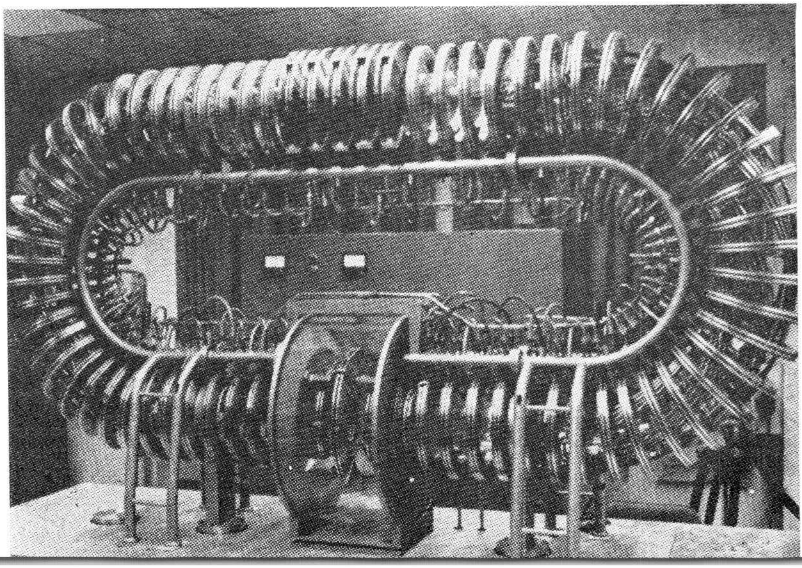

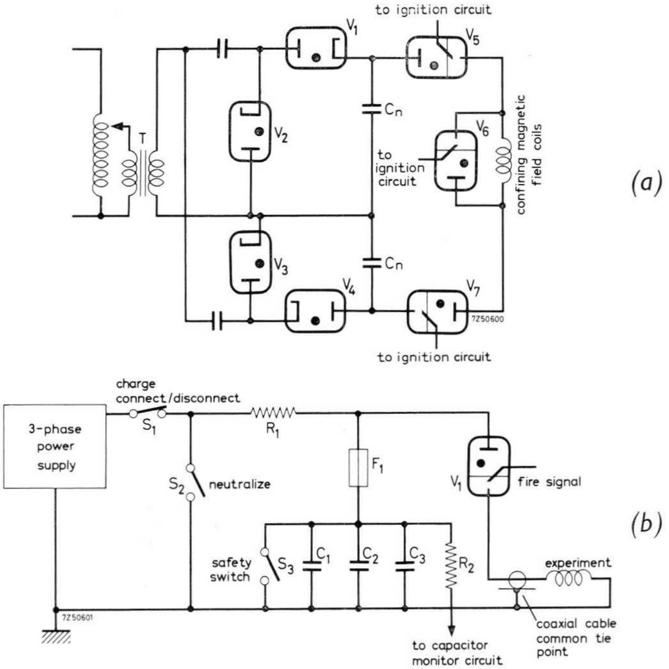

Fig. 4-59. (a) Typical stellarator charge and discharge control circuit; (b) Single basic circuit for discharging a section of a large capacitor bank.

current pulse released by the circuit has a useful length of about 0.1 s and is delivered to the stellarator confining windings at the rate of 1 pulse/min. Another, simplified circuit for discharging a small section of a large capacitor bank comprising some 4000 capacitors is given in Fig. 4-59*b*. A control set-up for controlling and monitoring the capacitor bank charge and discharge sequences is shown in Fig. 4-60.

One method of obtaining the very high thermonuclear temperatures and gas discharges in the stellarator is by ohmic heating, which entails passing a high electric current (≈ 3 kA) through the plasma stream. The capacitor discharge principle is again employed, the discharge current being passed through the primary winding of a special ohmic heating transformer (see Fig. 4-57*a*). The magnetically confined, ionized gas itself constitutes the secondary winding.

Continued experiments with equipment of this type have so far yielded no conclusive results in the bid to achieve successful thermonuclear control. However, the work goes on and valuable knowledge is being gained, leading to a clearer insight into the behaviour and nature of ionized gases and a better understanding of electrical conduction in plasma. The experiments are also providing useful experience which may lead to design improvements being made in industrial gas-filled tubes, and opportunities for the development of new electronic devices utilizing plasma.

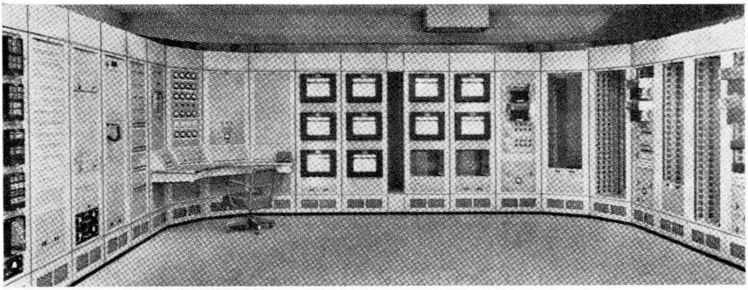

Fig. 4-60. Control centre for monitoring capacitor bank charge and discharge.

References:

[1] *Bivens, M. E.:* "Frequency Changer for Resistance Welding", *Electronics* **26**, February 1953.

[2] *Früngel, F.:* "Das Kondensator-Impulsschweissen", *Schweissen und Schneiden*, **12**, No. 1, 1960.

[3] *Mulhern, M. J. and Crawford, S.N.:* "Rectifier Equipment for Electronic D.C. Motor Drives", *A.I.E.E. (I.E.E.E.) Transactions* **69**, January 1950.

[4] *Moore, G. M.:* "Impulse Magnetizer for Permanent Magnets", *Electronics*, **28**, August 1955.

[5] *Hadfield, D. and Johnson, H.:* "Electronic Magnetizing and Demagnetizing", *Electronic & Radio Engineer* (now *Industrial Electronics*), **36**, July 1959.

[6] *Pettit, D. L. and Montross, R.:* "An Ignitron Contactor for Direct Press Drives", *A.I.E.E. (I.E.E.E.) Transactions*, Paper No. **57-191**, December 1956.

[7] *Van Rossum, R. and Varekamp, D.C.:* "Nouvelles Installations pour la Purification des Eaux de la Ville de Rotterdam", *Philips Industrie*, **24**, 1955.

[8] *Volz, C. D.:* "Ignitron-Pulsed Electric Fence", *Electronics* **35**, April 1962.

[9] *Carroll, J. M.:* "Our Stake in Thermonuclear Power", *Electronics (Engineering issue)*, **31**, December 1958.

[10] Abstracted from *EDN Magazine*, **5**, February 1960.

5 Advice for Installation

The contents of this chapter are intended to give the user practical guidance in the installation of ignitron tubes and ancillary equipment, together with the relevant measures necessary for reliable, safe operation prior to putting into service. In order to obtain optimum trouble-free performance and maximum tube life it is important that the instructions be strictly observed, otherwise erratic or unsatisfactory service may result.

5.1 Mounting of Tubes

The correct operating position for ignitrons is with the tube mounted upright, the anode terminal being uppermost. Care must be taken in securing the various leads and supports to avoid undue stresses being imposed on the metal-to-glass seals. The base supports must be strong enough to bear the full weight of the tube, and of sufficient cross-section to carry the maximum expected operating current.

Ignitrons are inherently robust and mechanically strong and are thus capable of withstanding moderate shocks. However, in order to obtain the most stable and reliable operation it is advisable that adequate provisions be made to protect the mounted tubes against severe mechanical shock or vibration, and the effects of strong r.f. or magnetic fields. These might disturb the surface of the mercury pool or tend to change the tubes' operating conditions. It is important that all bolts, nuts and washers used in fastening the various electrode connections, be made of steel rather than brass or copper; this ensures that current flow occurs through the contact surfaces and not through the bolts themselves.

Carry out the tube mounting procedure as follows:

(1) With the tube held vertically, tightly fasten the cathode conductor to the base support with a pair of *steel* bolts fitted through the mounting holes provided.

(2) With the aid of two wrenches, bolt the anode cable to the appropriate terminal on the equipment with a *steel* bolt. When the ignitron is not fitted with an anode cable, the external supply cable must be connected to the stem of the anode electrode with a *steel* bolt, using two spanners for the purpose. It is advisable to periodically check that all bolts are firmly secured, and that the contact areas are clean

and free of oxidation, grease and dirt; discolouration of the contact areas is evidence of a poor connection.

(3) Make the connection to the igniter lead-in cable. Although the igniter connection is of rigid construction care must be taken to avoid possible damage.

5.2 Cooling

5.2.1 Cooling System Requirements

The coolant must meet the following requirements with respect to solid and soluble chemical content:

— pH: 7-9
— Max. weight of chlorides/litre: 15 mg
— Max. weight of nitrates/litre: 25 mg
— Max. weight of sulphates/litre: 25 mg
— Max. weight of insoluble solids/litre 25 mg
— Max. total hardness/litre: 12.5 English degrees
10.5 U.S. degrees
10 German degrees
or
18 French degrees
— Min. specific resistance: 2000 ohm.cms.

Usually ordinary tap-water will satisfy the above requirements. If however, the water available locally is unsuitable, a cooling system employing a heat exchanger with sufficient suitable water can be used. The temperature of the cooling water must be at least 10 °C (50 °F).

The water hoses must be of electrically insulated material and be connected so that the cooling water enters each tube through the inlet brass pipe, at the base of the water jacket, and leaves through the outlet pipe at the top. In connecting the ignitron to the cooling system it may be necessary to re-orientate the inlet and outlet pipes to a more convenient position. Care must be exercised in carrying out this operation since twisting the pipes in a rough or careless manner may rupture the thread, or cause leakage at the point where the pipe is screwed home. By interconnecting the pipes in series with suitable lengths of hose, it is possible to circulate the cooling water through a maximum of three tubes in succession.

The water hoses must have a minimum length of 50 cm ($\approx$20 in) to ensure that the electrical resistance of the internal water column is sufficiently high. They should be secured with clamps, taking care that no leakage can occur. A suitable stop valve can be fitted at the inlet of the cooling system, to enable the flow of cooling water to be set to the required volume and be locally switched on and off.

5.2.2 Water Flow Control

In resistance welding applications the values of demand power and average current are pre-determined for a given operating sequence (see ch. 3 sect. 3.1.5), the amount of cooling water required to maintain the tube at a safe operating temperature being related to the particular average current value and the temperature of the external water supply (see ch. 8). When the tubes are cooled by an uncontrolled, continuous flow of tap-water the temperature of which remains within the rated limits, it is only necessary to ensure that the quantity of water flowing through the jackets is sufficient to maintain the tubes at a safe operating temperature. Use of a water control thermostat considerably improves water economy since the water flow is intermittent, only enough water being drawn as is necessary to maintain the tubes at a constant operating temperature. An even greater saving in water is obtained by employing a self-regulating, constant flow valve integral with the hosing at the water inlet, which ensures a continuous, automatically controlled volume of water irrespective of variations in water mains pressure. This results in a steady mercury vapour temperature which is conducive to prolonging tube life.

With one particular type of constant flow valve [1] the regulating action is achieved by a flexible "*Neoprene*" diaphragm, operating against a precision orifice. The movement is entirely automatic and silent, a constant flow of water being accurately maintained over a wide pressure range. The use of this type of valve to control the average water flow through the tubes reduces pressure hammer and lowers maintenance costs and moreover, contributes to water economy by considerably reducing the amount of water consumed by the system. The hazard of water condensation on the tubes under conditions of high humidity is also reduced.

Fig. 5-1 shows a flow graph for a typical, self-regulating water flow valve at constant delivery. When selecting a suitable valve, particular

---

[1] The constant flow valve referred to is supplied by Laycock Engineering Ltd., Sheffield, England.

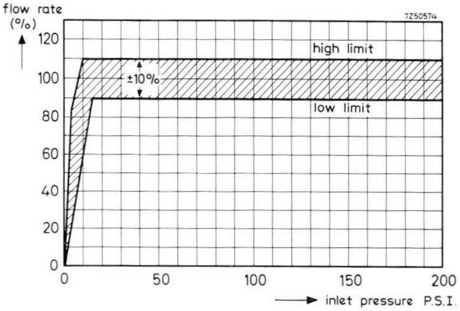

Fig. 5-1. Flow graph (constant delivery).

attention must be paid to the required volume of water per minute for adequate cooling; the valve chosen must accordingly have an orifice of sufficient dimensions. When, as an alternative to the foregoing arrangement a water control thermostat is used, it is mounted on the temperature sensing pad on the first tube of a pair, or on the last but one of a series. The thermostat operates in conjunction with a solenoid valve, which automatically controls the flow of water into the cooling system with changes in tube temperature. Another thermostat, mounted on the last tube, protects the ignitrons against excessive temperature. The function of this device is described later in the chapter, in the section dealing with protections.

A typical water cooling system for an ignitron pair is given in Fig. 5-2 which shows the location of the stop and constant flow valves and protection thermostat; the position of the water control thermostat and

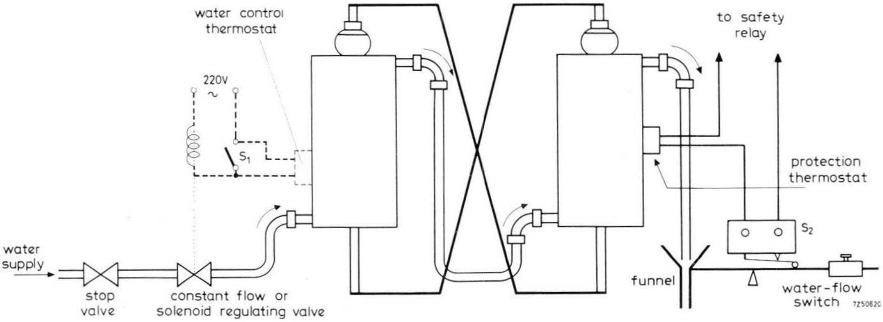

Fig. 5-2. Water cooling system with constant flow valve, protection thermostat and water-flow switch.

associated solenoid valve when used, is indicated by the broken lines shown in the drawing. The tubes should not be put into operation until all air has been removed from the cooling system, i.e. when water flows from the outlet pipe on the last tube.

As an aid to ensuring that the tubes have been correctly installed, a useful test is to momentarily close the stop valve after filling and check that after a brief interval, the outflow of water ceases. A continuous flow of water when the stop valve is closed is indicative of faulty installation, and may result in the tubes being completely drained when the equipment is finally shut down. *When recommencing operations unless an interval is allowed for re-filling, this may endanger the tubes.*

The cooling water must under normal operating conditions, be allowed to flow freely from the last tube in the circulation system into a funnel or to a suitable scavenge point in the vicinity. This enables the flow of water to be easily checked, and prevents the water pressure in the tube jackets from becoming too high. *The pressure must never exceed 3.5 atm. (50 lb/in^2).* When operations are suspended for a lengthy period, it is advisable to maintain the flow of cooling water for a further 15 to 30 minutes so that the tube internal parts are cooled down evenly, thus preventing condensation of mercury on the tube anode or anode insulator.

5.3 Protections

5.3.1 Tubes

Care must be taken to ensure that the prescribed operating temperature limits of ignitrons are not exceeded. When tap-water at a temperature within the rated limits is used as the coolant, it is necessary to adjust the stop valve so that sufficient water flows through the jackets.

The protection thermostat mounted on the last tube, is preset to operate at a certain value of temperature to prevent the tubes overheating in the event of a water supply failure. Should the water supply fail or a fall in water pressure occur as a result of either blocked or defective hoses, a faulty constant flow valve, or the stop valve being accidently closed, the operating temperature of the ignitrons increases and the temperature limit of the protection thermostat is exceeded. The thermostat operates, de-energizing an associated relay which breaks the ignition circuits of the ignitrons or trips the main circuit breaker, rendering the tubes inoperative. The protection thermostat and associated safety relay are actuated only when the tubes' operating temperature exceeds the maximum permissible limit.

Since the water jacket of an ignitron is held at mains potential, the mounted thermostat must be capable of withstanding this voltage. When the thermostat is not rated for mains voltages, an isolating step-down transformer can be used to protect it from damage.

In addition to, or instead of a protection thermostat, a water-flow switch (S_2 in Fig. 5-2) can be fitted at the outlet of the cooling system, to monitor the outflow of water and ensure that the tubes are only operative whilst water is flowing. When standard tubes are used for power rectification with their cathodes not at earth potential, or if specially designed rectifier ignitrons are employed, an electrolytic erosion target must be attached to the exterior of the water jacket to prevent corrosion of tube parts.

5.3.2 Main Equipment

The complete installation must be connected to the mains supply through protecting fuses and circuit breakers of adequate size. Since the current drawn from the mains may reach several thousand amps, it is important that the supply leads be of sufficiently large cross-section so that their resistance and thus the voltage drop across them is kept small.

When the main discharge of an ignitron is interrupted, voltage transients are produced in the primary of the load transformer owing to its self-inductance which, if unchecked, may puncture the transformer insulation. In resistance welding installations a damping resistor [2] connected across the transformer primary and drawing between 10 and 20 A considerably reduces these transients, the total power dissipated in the resistor being determined by the duty cycle of the welding machine. In rectifier applications damping is obtained by shunting a series *RC* combination across the transformer and across leads having appreciable self-inductance.

Local cathode and/or anode circuit breakers are required in addition to the mains supply switches; these are essential with installations working into an inductive load, where a back e.m.f. is likely.

CAUTION: When switching on it must be remembered that the ignitron water jackets are live and must not be touched.

---

[2] This resistor also increases the ignition current and prevents possible damage to the igniters arising from an open secondary circuit, e.g. open welding electrodes.

6 Maintenance

6.1 Tube Life

The end of the useful life of an ignitron may often be ascribed to extrinsic causes such as firing with a defective control device, i.e. thyratron or thyristor, incorrect cooling, or operation at a too low power rating or instantaneous value of igniter voltage, any of which may damage the igniter and effectively shorten the tube's working life.

In welding applications the normal life expectancy of an ignitron is often in excess of 4 years, irrespective of the operating conditions imposed upon the tube, although its transfer from one installation to another may be detrimental to the tube's lifespan. The characteristics of an ignitron under normal operating conditions change very slightly during its life, any marked differences being caused almost always by defective control circuitry, cooling failures, misuse, or negligence in providing adequate maintenance. An example to illustrate this is given by an underrun tube employing self-excitation, where the igniter is not supplied with sufficient energy to permit build up of the mercury arc and may thus be irreparably damaged. In welding installations one of the commonest mistakes made is to test the functioning of the equipment with the welding electrodes open, i.e. no workpiece in position. Under these conditions the welding transformer primary current is very small, and that flowing through the igniter is unable to rise to the prescribed 12 A within 100 μs. In such circumstances the igniter can be afforded a measure of protection by shunting the transformer primary with a suitable resistor, which produces a rapid rise in igniter current to a value sufficient to fire the tube.

When an aging thyratron is used as the control element a large voltage drop may occur across the tube when it conducts, resulting in less energy being available to feed the igniter. Thus for ensured firing with the minimum risk of damage to the igniter or deterioration in its characteristics, the condition and values of the ignition circuit elements comprising series resistor, igniter resistance ($\approx$25 to 35 Ω), thyratron or thyristor, and mains and load impedances, must be given careful attention if the circuit is to deliver the specified firing pulse. Further to the foregoing, which has a direct influence on the life expectancy of a given tube, reverse current flow through the igniter will now be discussed.

The cause of igniter reverse current is sometimes very difficult to find, but may be often be ascribed to defective components in the ignition circuit such as a faulty rectifying element, backfiring thyratron, oscillating thyratron or thyristor, or stray, parasitic capacitances in the thyratron heater transformer or elsewhere in the circuit. The effect of reverse current through the igniter is to considerably shorten the useful life of the tube, and if suspected, measures must be taken to trace and remedy the fault without delay. Fault-finding will invariably reveal that the defect lies somewhere in the ignition circuit.

A poor vacuum also contributes to curtailing tube life. The latter is unlikely to be affected during normal service since the arc discharge intrinsic to the operation of the tube, acts as a pump to maintain a high quality of vacuum. However, when tubes have been stored for a long time, possibly some years, or have been out of service for a protracted period, the development of minute quantities of gas may result in a gradual deterioration of the vacuum. Since the manufacturer's current range of ignitrons are fitted with an internal getter, this problem is largely overcome. A gassy tube may thus still give satisfactory service, provided that when put back into use it is not operated at full power immediately. Summarizing, it can thus be generally assumed that external influences affect the average lifespan of a given tube far more than may be attributed to normal igniter wear.

The various procedures which follow are intended to facilitate routine maintenance of ignitrons and associated equipment whilst in service, and to provide a guide to on-the-spot checking of tubes which exhibit signs of malfunctioning or wear. It is pointed out that the tests specified are not to be interpreted as a means of exhaustive fault finding in tubes and equipment, since to check the characteristics and behaviour of an ignitron under full load conditions requires elaborate test equipment and adequate facilities, most probably not at the user's disposal. For this reason the tests are designed solely to enable the user to effect normal running maintenance of several or a large quantity of tubes, at the installation site, with the minimum of difficulty and without recourse to specialized test equipment. A *visual check* is usually sufficient to determine whether, and to what extent a tube shows signs of obvious damage, arising from incorrect operation or mishandling. An *igniter test* is carried out by measuring the igniter resistance; a suspected faulty or broken igniter can then be detected. *Vacuum tests* enable an assessment of the quality of the tube vacuum to be made. Spare tubes are subjected to a *heat treatment* in order to prepare them for service.

It is recommended to perform the various checks in the order given.

Before carrying out visual inspections which require the ignitron to be inverted, tilted or positioned horizontally, it is important to first ensure that the tube has cooled down sufficiently, otherwise permanent damage may occur as a result of mercury adhering to any remaining hot areas such as the anode. It is advisable to remedy any detected defect or discrepancy before proceeding further with the tests.

6.2 Visual Inspections

6.2.1 Glass Anode Insulator

It is very rare for the anode glass-to-metal insulator to become defective. However, rough handling or misuse may give rise to the formation of a rough star-shaped crack in the glass, whilst the *Fernico* [1] sealing ring may also be damaged. If the insulator is cracked, annealing colours are present on the internal anode stem and perhaps burnt spots are found on the Fernico, it is probable that the damage has been caused by arcing. This may be attributable to either insufficient cooling, overloading, or an internal flash-over having occurred between anode and cathode, because of mercury adhering to the inner surface of the glass. When it is apparent that the defect has arisen from the latter cause, it is most likely that the anode electrode had not been adequately pre-heated before putting the tube into service (sect. 6.5), or that mercury has condensed onto the insulator owing to the incidence of extraneous air draughts.

6.2.2 Water Jacket

Burnt spots visible on the water jacket are evidence of insufficient cooling but are not necessarily indicative of a defective tube, provided that the condition has not escaped notice for too long. Bad cooling and subsequent over-heating may often be traced to the tube water jacket having become clogged with silt which if not removed immediately, may lead to arcing and holes being burnt in the inner wall of the jacket, ruining the tube. One method of removing the silt, usually a deposit of iron oxide or carbonate scale, is by passing a mixture of water and air at high pressure through the tube jacket.

6.2.3 Water Supply Connecting Pipes and Hoses

The right-angled inlet and outlet connecting pipes at the top and base

---

[1] The name Fernico is derived from the chemical formulae for the materials used in the sealing ring i.e., *Fe* (iron), *Ni* (nickel) and *Co* (cobalt).

of the water jacket are leak-proof. There is however, a risk that leakage might occur as a result of any necessary reorientation effected during installation, when connecting the tube to the cooling system. If there is evidence of leakage, a non-hardening sealing compound such as "*Hermatite*" could be used to render the connection water-tight again.

Since rubberized hose of uniform bore is used to circulate the cooling water at an even pressure to and from the tube jackets, the build up of scale and silt deposits in the hosing is negligible. Maintenance is thus reduced to periodic inspections for water-tightness, any leakage being remedied by replacing the faulty length of hose.

6.2.4 Anode and Cathode Connections

The lacquer coating on the anode stem of the tube becomes heated during normal service and blisters may form on the metal, on either side of the glass insulator. If the lacquer along the whole visible length of the anode stem shows signs of extensive discolouration, this may be attributable to overloading of the tube. The cathode conductor may become scorched as a result of imperfect contact with the mounting rail, the steel anchoring bolts must thus be well tightened to ensure a good connection.

6.2.5 Igniter Connection

A cracked lead-in insulator at the igniter connection point is normally caused by rough or inexpert handling, and invariably results in leakage of vacuum. It is possible that initially the crack is small so that the tube vacuum is still good, however continued use of the tube may result in arcing, causing a hole to be burnt in the inner wall of the cooling jacket.

6.2.6 Mercury Cathode

If the tube is inverted so that mercury flows from the cathode pool to the anode insulator, dispersed particles of graphite from the anode may be seen as "dust" on the surface of the mercury. This phenomenon may be considered as normal since it arises from treatments given during manufacture, and will increase gradually as the tube ages.

CAUTION. Since the orientation of the tube may have been changed in carrying out one or more of the foregoing checks, it is possible that mercury drops may adhere to the anode or anode insulator. It is therefore advisable that the tube be subjected anew to the heat treamentt prescribed in the section devoted to stored tubes (sect. 6.5), before being returned to service or tested further.

6.3 Igniter Test

By measuring the resistance between the igniter and the tube cathode, a suspected defect may be revealed. For this test an ohmmeter or suitable multimeter switched to the ohms range is required, supplied from a battery or low voltage a.c. source. When a d.c. instrument is used its positive terminal must be connected to the igniter and the measuring voltage must not be greater than 5 V; with an a.c. instrument the maximum value of voltage must not exceed 3.5 V rms. Higher voltages could damage the igniter and owing to the effect of current heating, result in false readings.

Measurements must be carried out with the ignitron in its normal, upright working position, disconnected from the cooling system. The value of igniter resistance is normally between 15-80 Ω, the average value being about 30 Ω. *Small* deviations in resistance outside these limits should not however, be regarded as reason for rejecting the tube, since the values are not critical and usually a fairly ample spread in resistance can be tolerated. Evidence of an igniter resistance too far outside the permissible limits may be found when carrying out other tests on the tube.

An infinitely high measured resistance shows that the igniter is no longer in contact with the mercury pool and may possibly be broken. A resistance reading of zero on the other hand, indicates that the igniter and mercury are short circuited. A better meter indication can be obtained by slowly tilting the tube out of the vertical plane. An infinity resistance reading measured at a relatively small tilt angle is usually indicative of a defective igniter, physical damage having been sustained during transit or perhaps as a result of reverse current flow through it. When it is evident that the fault is attributable to one of these causes, it is advisable to return the tube to the manufacturer for examination.

6.4 Vacuum Tests

The design of the manufacturer's range of ignitrons is such that the quantity of air or gas present in a tube before and during service, is negligible (ref. sect. 6.1). However, should a tube exhibit signs of gassiness, this can usually be attributed to overloading the tube, igniter reverse current or some other abnormal condition. The tests which follow have been devised in order to establish whether:

- a suspected gassy tube is still usable by virtue of the fact that the quality of the vacuum is still good *(Serviceability Check);*

if the vacuum is below the optimum level whether:

- the amount of gas is relatively small, so that the tube can be successfully subjected to cleaning up *(High Potential Test);*
- gas is present in large proportions, which renders cleaning up ineffective;
- the tube is full of air.

6.4.1 Serviceability Check

This test provides a simple, rapid and effective means of assessing the quality of the tube vacuum with the ignitron mounted in its normal working position in the installation, and without recourse to elaborate test equipment. The more stringent, high voltage test with the tube removed from its mounting, is described later. Fig. 6-1 illustrates the method adopted to carry out the test. As is evident in the drawing, the only item of test gear required is an induction coil capable of generating a 10-25 mm spark in free air. It is advisable to carry out the test step by step as follows:

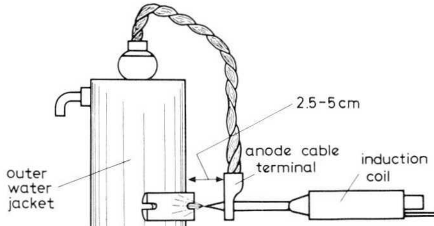

Fig. 6-1. In situ vacuum test to check tube serviceability.

(1) First ensure that the mains supply to the ignitron is switched OFF.
(2) With a suitable strap, temporarily connect the cathode electrode to

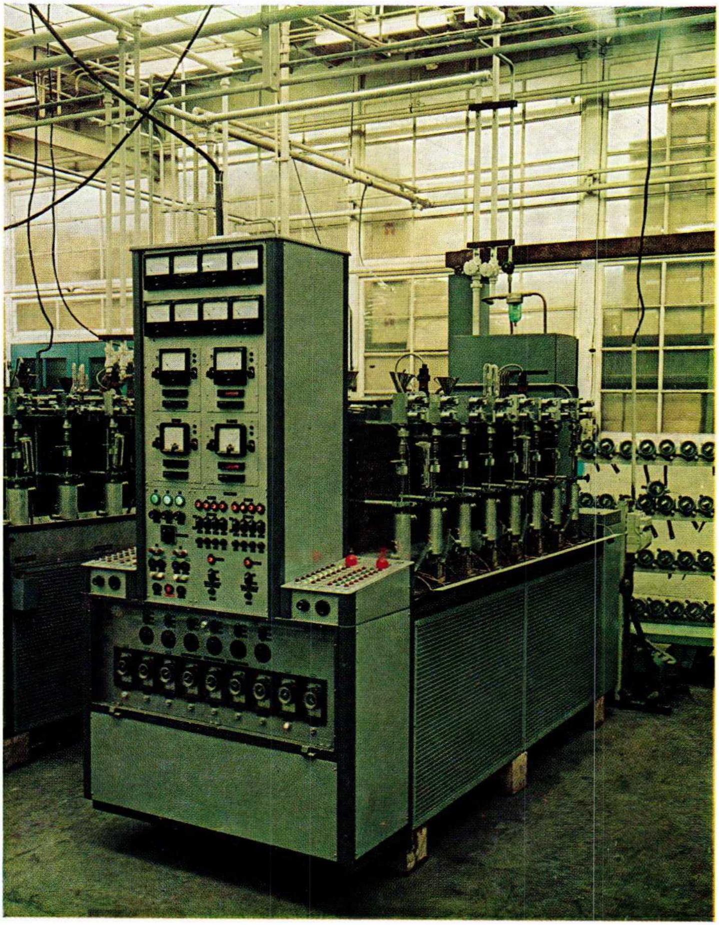

Fig. 6-2. Automatic pumping console. This equipment enables several ignitrons (visible at right) to be simultaneously pumped free of air at maximum current flow and then sealed, a high quality of vacuum being obtained.

earth in order to protect the circuit insulation. Remove the thermostat if one is fitted, from its mounting on the water jacket. [2]

(3) Disconnect and bend the anode cable so that the terminal is about 25-50 mm from the thermostat mounting plate.

(4) Gradually move the tip of the induction coil discharge electrode in the direction of the mounting plate. Check that at a certain intermediate distance, a momentary discharge takes place between the electrode tip and the plate; note the approximate distance at which this occurs.

(5) Repeat the foregoing operation, this time simultaneously making contact between the anode terminal and the electrode tip. Check that the discharge occurs at roughly the same intervening distance as before. If the results obtained are as described then the condition of the tube is normal and the vacuum satisfactory.

(6) If when carrying out operation (5), with the anode terminal in contact with the tip of the coil electrode, the discharge distance between the tip and mounting plate is small, say 5 mm, this is indicative of a gassy tube. The ignitron should then be removed from its mounting for testing at high potential.

6.4.2 High Potential Test

When a tube has been subjected to the preceding test and found to be gassy, the high potential test which follows provides a means of determining whether the tube can be restored by cleaning up. The test circuit required for evaluating the gas content at high voltage is given in Fig. 6-3 and is not too difficult to construct. Any suitable h.v. transformer capable of supplying 10 mA at 10 kV can be used for T_2, provided that the secondary current does not exceed 25 mA at this voltage. The required circuit components are listed in the table.

Carry out the test as follows:

(1) Connect the tube to the test apparatus in its normal working position, i.e. anode connection uppermost.

(2) Slowly adjust the variable transformer from its zero volts setting, so that the voltage across the tube indicated by voltmeter *V* increases. Continue adjusting until lamp *LP* is lit, which indicates that the ignitron is conducting (intermittent flashing of *LP* may be due to

---

[2] It is advisable to use the thermostat mounting plate for this test rather than the tube wall, to avoid puncturing the protective plastic wall coating.

the presence of minute droplets of mercury on the anode lead or insulator).

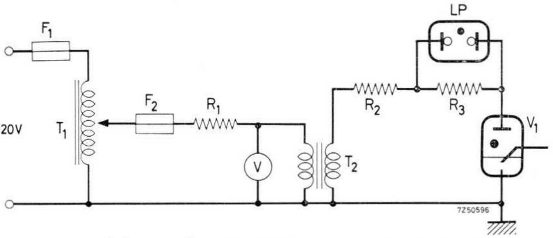

Fig. 6-3. High potential vacuum test circuit.

Resistors	Transformers	Miscellaneous
R_1: 220 Ω, 250 W	T_1: 0-260 V, 540 W	LP: neon indicator GL40D or 41 M
R_2: 600 Ω, 96 W	T_2: 220 V-10 kV, 0.48-10 mA	F_1,F_2: 2 A
R_3: 22 kΩ, 16 W		V: moving coil voltmeter 0-10 kV

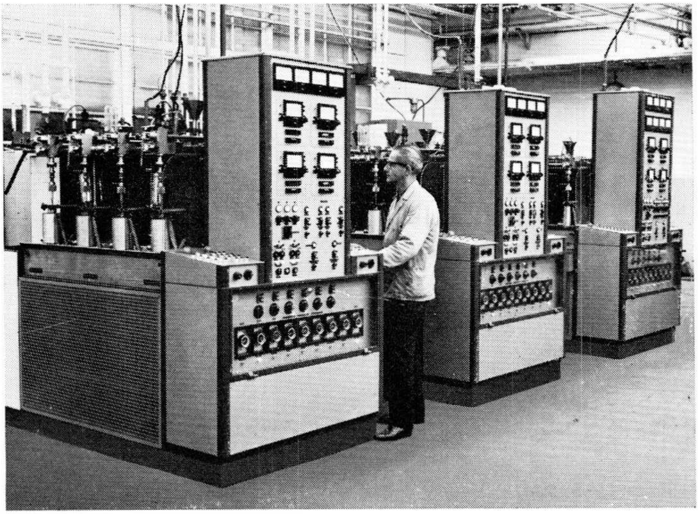

Fig. 6-4. A batch of ignitron tubes being subjected to automatic pumping during the final stages of manufacture.

(3) Check that after a short interval *LP* becomes extinguished. When this occurs increase the transformer control until finally, a maximum indicated voltage of 10 kV rms on the voltmeter is reached. If lamp *LP* remains extinguished it can be safely assumed that the gas has been cleaned up sufficiently, enabling the tube to be used again.

(4) If after waiting for a brief interval *LP* remains lit, repeat operation (2). If, on repeating this operation, the level of voltage at which *LP* lights up shows no tendency to increase, then clean-up of the gas is not possible and the tube should be rejected.

6.5 Heat Treatment of Stored Tubes

Spare tubes must preferably be stored with the anode connection uppermost as shown in Fig. 6-5*a*. In order to have some ignitrons ready for immediate use, an adequate number of tubes should be placed in the vicinity of a continuously lit 100 W lamp during storage (Fig. 6-5*b*), so that the anodes and anode insulators are heated sufficiently for any mercury deposits to be removed. When an ignitron which has not been subjected to pre-heating is to be put into service, the tube should first

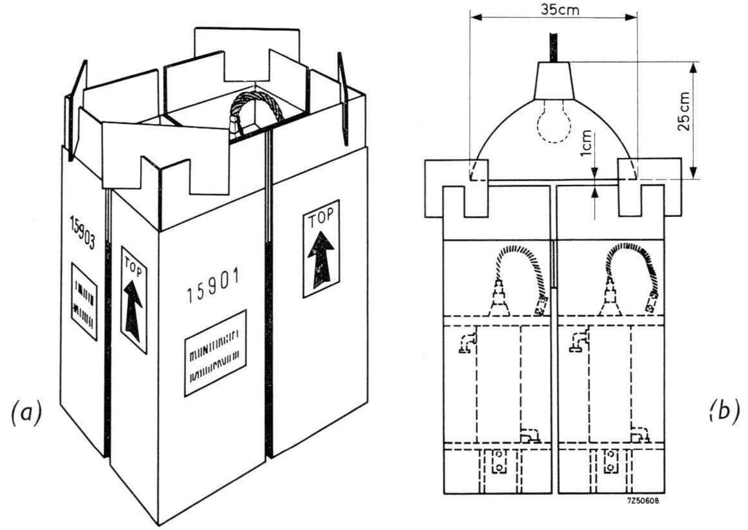

Fig. 6-5. (a) Storage of spare tubes; (b) Pre-heating of stored tubes.

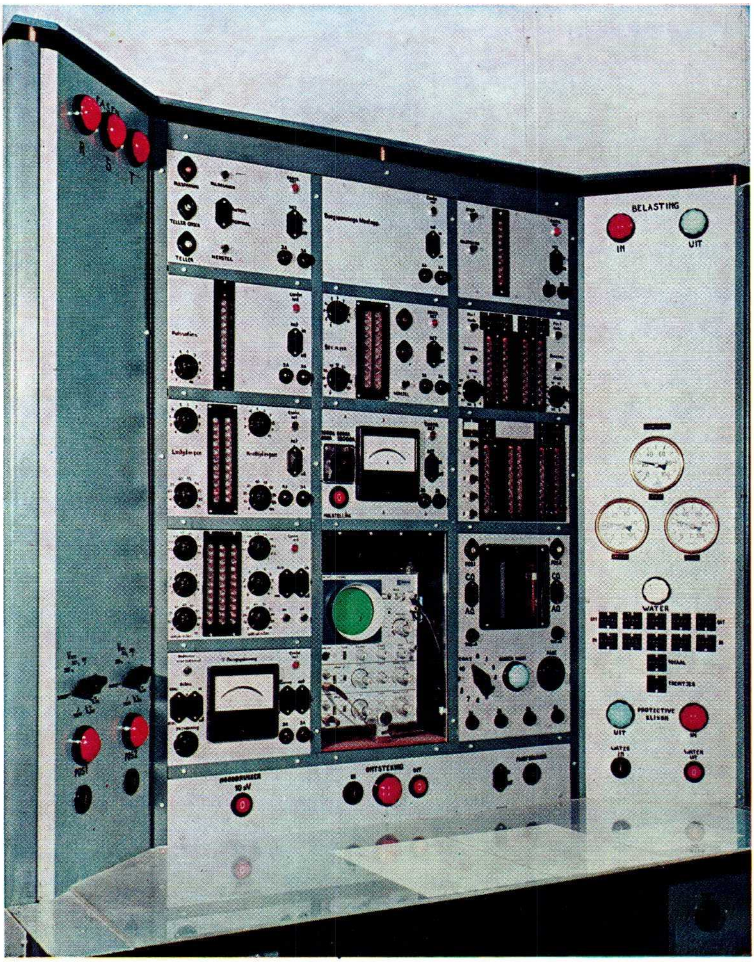

Fig. 6-6. Welding test console (single-phase). During production the ignitrons are mounted in a special rig and tested under simulated welding conditions.

be mounted in the installation and connected to the cooling and mains circuits, the cooling water being allowed to circulate through the tube jacket. The anode stem and insulator must then be warmed up with a 250 W heat source, e.g. an incandescent lamp, at a distance of 15 cm (6 in) for a minimum period of 30 minutes (ref. Fig. 6-8). After pre-heating the mains switch can be closed and the tube put into operation.

To prevent mercury condensing onto the anode and anode insulator when the installation is switched off, the procedure described in ch. 5 sect. 5.2.2 should be adopted so that all the internal parts of the tube are cooled down evenly. Steps must be taken to eliminate cold air draughts in the vicinity of the tube during the cooling down process, since these may

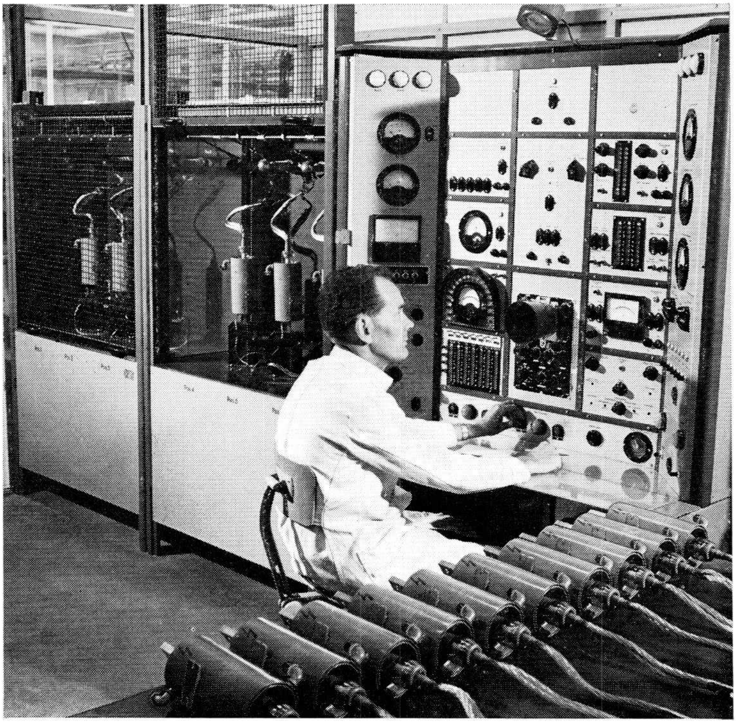

Fig. 6-7. Final production testing of ignitrons under three-phase, full load conditions.

also cause mercury to condense on the anode parts. When it is difficult to effect the necessary preventive measures against currents of air, it is important to ensure that the anode and anode insulator are not cooled to a temperature below that of the coolant.

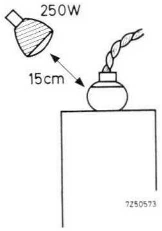

Fig. 6-8. Post-installation heating of unprepared tubes.

7 Interpretation of Data

Since electronic engineers sometimes experience difficulty in correctly interpreting electron tube data, it is not surprising that they may be puzzled by the published data on the much less familiar ignitron tube. The operating principles of ignitrons are not only very different from those of other types of electron tubes but moreover, they are used in high power applications of which electronics personnel have normally a less detailed knowledge. Electrical engineers on the other hand have generally only a limited knowledge of the various factors which govern the permissible ratings of these tubes. Moreover, the terminology used in the electronic and electrical fields is by no means always identical, and it is likely that the correct meaning of certain terms peculiar to ignitrons may be unknown to experts in both fields. The principal factors which govern the operation of these tubes are thus discussed in greater detail herein, in the hope that this may help engineers engaged in the design of ignitron-controlled systems to obtain optimum results at a minimum of cost and trouble.

7.1 Thermal Loading

In considering the various factors which influence and determine the operating conditions of an ignitron for a particular application, the thermal loading is of major significance since it decisively affects the tube's optimum performance and safe working. For reasons of simplicity, the thermal loading is considered herein as consisting of two separate temperature components: (a) the average general tube temperature over a nominal 10 to 15 minute period and (b) the instantaneous mercury vapour temperature.

The permissible level of the overall tube temperature during a relatively long period of continuous duty, has to be considered when determining the maximum value of average current (I_{av}) which the tube can safely handle. This is necessary since with too high a value of I_{av}, the ability of the tube to dissipate the heat generated over a long-term may be impaired, resulting in an inadmissable general increase in temperature.

The consequences of the overall tube temperature being too high are manifested in several ways, any of which may lead to a reduction in the useful life of the tube and perhaps permanent damage. One of the most likely effects is liberation of gases adsorbed by the anode, which lowers the quality of the vacuum and results in general gassiness of the tube. Another possibility is that the anode and igniter glass seals and maybe the igniter itself become overheated, with the attendant risk of the relevant internal connections being burnt.

The instantaneous mercury vapour temperature component of the thermal loading on the tube is directly related to the pressure of the mercury vapour, this being a function of the peak current (I_p) which the tube is required to pass. During operation certain parts of the tube are subject to rapid increases in temperature, whilst in other parts the temperature rise will be more gradual. The inner surface of the tube wall for example, has a thermal time constant of about 100 ms, whereas those of the cathode and anode are roughly 1 and 5 minutes respectively. Because of these differences and as a result of the steep thermal gradient across the thickness of the inner tube wall, a critical condition obtains which may give rise to arc-back or uncontrolled ignition and subsequent breakdown of the tube.

Duty Cycle

Since the pressure of the mercury vapour depends principally on the value of peak current through the tube, the temperature difference between the cathode/anode and inner wall may be quite large and occurs very quickly at high values of I_p, whereas at lower values it is much less marked. The anode voltage (V_a) also influences the pressure within the tube, including any local instantaneous increases. It is thus possible for the tube to safely handle higher values of I_p at lower values of V_a and vice versa. In practice a limit is set on the conduction period of an ignitron to allow sufficient time for cooling, the on/off ratio or duty cycle (δ) as it is called, being dependent on the expected value of I_p. The duty cycle is always expressed as a percentage.

7.2 Thermal Time Constants

The effects of the dissimilar thermal time constants between the various internal parts of the tube may be more clearly understood with the aid of Fig. 7-1. In the graph, values of anode (T_a), cathode (T_c) and internal wall temperature (T_w) are plotted on log-log scales as a function of the time (t) during which the tube passes current. The instantaneous relationship between T_a, T_c and T_w is for reasons of clarity, shown with the time scale divided into four separate periods *A*, *B*, *C* and *D*.

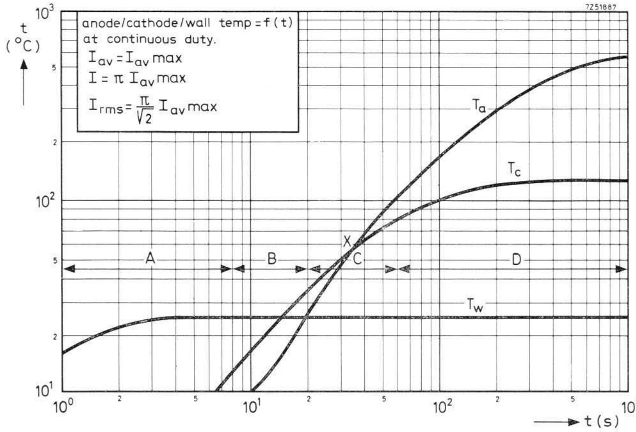

Fig. 7-1. Variation in tube anode (T_a), cathode (T_c) and wall (T_w) temperatures with time.

Reference to the graph shows that shortly after the tube is ignited, a temporary condition obtains where the wall temperature T_w rises rapidly to exceed that of both the anode and cathode (period A). During this period small droplets of mercury condense and accumulate on the anode, whilst other droplets are spattered onto the tube wall and evaporate. This causes a build-up of the mercury vapour concentration in the vicinity of the wall, which together with the mercury deposited on the anode creates a condition where there is a risk of arc-back or unstable operation. In order to reduce the possibility of this occurring, it is advisable to ensure that all tubes are subjected to pre-heating as described in ch. 6, sect. 6.5, before being put into service. An alternative measure is to commence operations with the ignitron initially passing a low level of current, which is later gradually increased to the maximum required value.

Toward the end of period A the cathode temperature T_c rises very steeply to exceed that of the wall and anode. Mercury droplets continue to condense on the anode during the next brief period (period B), however the evaporation of droplets on the tube wall ceases since this area of the tube is now relatively cooler.

After a certain time the next period (period C) commences, during which the tube warms up further and T_a rises to a level above that of T_c and T_w. The droplets of mercury formed on the anode during the preceding periods evaporate, creating conditions where the possibility of arc-back or uncontrolled ignition is again present. The likelihood of this occurring is dependent to a large extent on the value of peak current and anode voltage, and the rapidity with which the anode temperature rises above that of the cathode (point X in Fig. 7-1).

At the end of this period the ignitron reaches its normal, stable operating condition (period *D*), the anode temperature levelling off at some value greater than T_c and T_w. When this stage is reached the mercury deposited earlier on the anode will evaporate immediately, moreover in this condition no further condensation of mercury droplets on the anode occurs. Mercury droplets continue to condense on the tube walls, however the droplets formed fall back into the mercury pool, imparting a cooling effect to the cathode. When the ignitron has reached its normal operating condition *short-term* interruptions in current flow will not affect stable operation, provided that their duration does not exceed the thermal time constants of the tube.

7.3 Virtual Temperature

Since the anode thermal time constant is rather long, it is only necessary to limit the average current passing through the tube to ensure that the heat dissipative ability of the anode over the long-term is not exceeded. During periods of high current flow which are short compared to the anode thermal time constant, the current magnitude is limited by the mercury vapour pressure and the residual ionization level. Both of these factors are in turn related to the mercury pool and wall temperatures.

The anode voltage, mercury vapour pressure and/or level of residual ionization together directly influence the operating conditions of an ignitron, and under unfavourable conditions are invariably responsible for tube breakdown. The combination of mercury vapour pressure, wall and mercury pool temperatures and residual ionization level can be collectively expressed by the term virtual temperature (T_v), (ref. Fig. 7-2). From the figure it can be seen that with increasing values of anode voltage (V_a), the maximum permissible virtual temperature must be decreased to ensure trouble-free operation. At high ionization and pressure levels the tube breakdown point is lower; to offset this V_a must also be kept at a lower value.

T_v increases within a time *tc* seconds to a level dependent on the value of the peak current (I_p), which is determined by the load. The tube

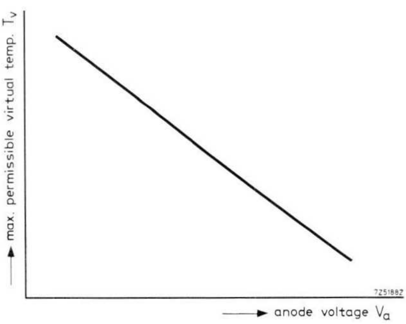

Fig. 7-2. Relationship between tube virtual temperature (T_v) and anode voltage (V_a).

continues to pass current at a given value of V_a for a period t, at the end of which T_v reaches the point where breakdown occurs.

In Fig. 7-3 T_v is plotted against V_a on the left-hand side of the graph, whilst the variation in T_v with time for different values of current is shown on the right-hand side. The lower part of the graph which shares a common time abscissa with the upper section, illustrates the levels and duration of current that may be applied in a particular time interval. Reference to the graph shows that T_v at current I_3 rises to a value T_{v2} in a time equal to t_1. Thus this value of current may be applied for the duration of interval t_1 at an anode voltage equal to V_{a2}. With a lower value of anode voltage (V_{a1}) and the same value of current, a level corresponding to T_{v1} is reached in a time t_2. Thus under these conditions the tube can safely pass a current equivalent to I_3 for a longer period ($t_1 + t_2$ in this instance).

Neglecting the average current (I_{av}), the tube could theoretically pass current at the level of I_1 at an anode voltage equal to V_{a1} for an unlimited period without affecting T_v. However, the limiting factor is I_{av} which affects the anode temperature over the long-term. The curve $T_v(I_2)$ shows the increase in virtual temperature at a different current value for anode voltages of V_{a1} and V_{a2}, from which the permissible conduction periods (t_2 and t_3) can be derived.

When the maximum permissible virtual temperature is reached under a given set of operating conditions, the ignitron must be adequately cooled before the next conduction period occurs. This is necessary because the amount of heat generated during the conduction period far exceeds that which can be dissipated over a cooling period of similar duration. In order to obtain efficient cooling it is thus necessary that the cooling period be much longer than the conduction time.

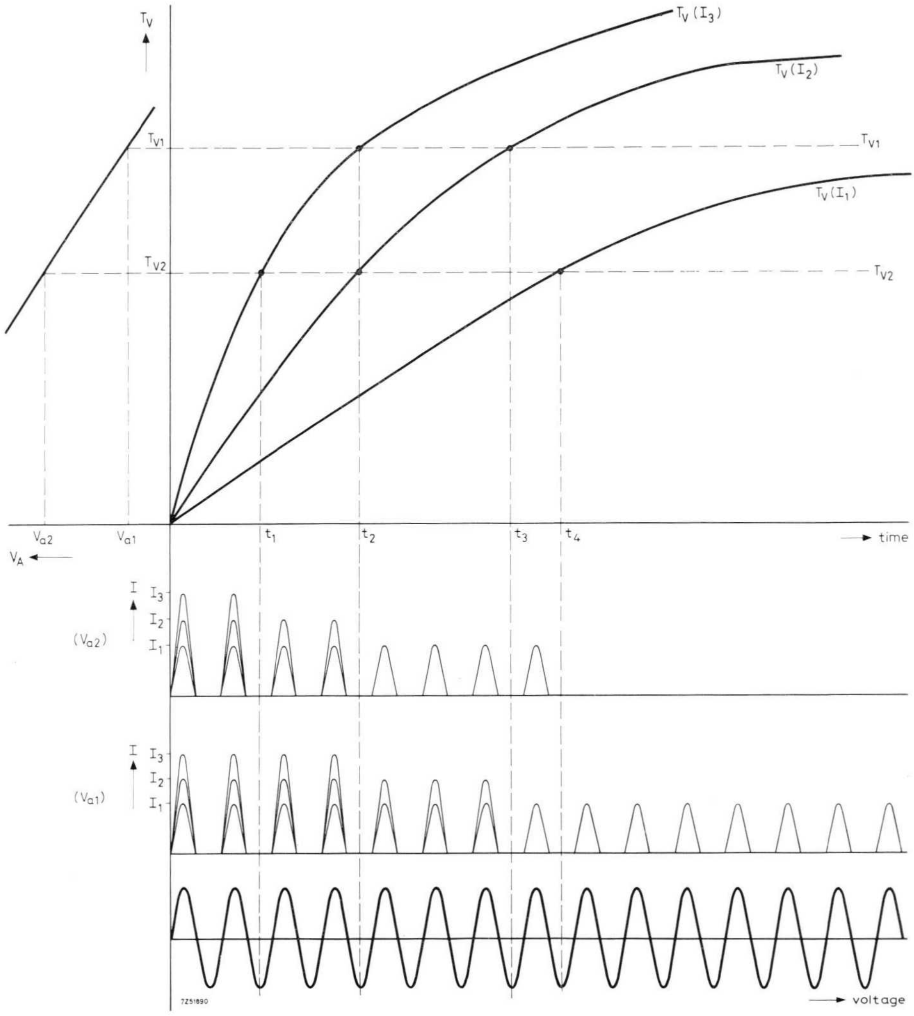

Fig. 7-3. Variation in virtual temperature with time for several values of current at two different anode voltage levels, which determines the permissible tube conduction times.

7.4 Averaging Time

Fig. 7-4 shows the relationship between the period during which heat is generated within the tube (t_h), and the cooling period necessary for stable operation (t_c). The sum of t_h and t_c represents the minimum possible time required for one complete conduction and cooling period, after which the ignitron may be fired again. These two periods together constitute the maximum averaging time (t_{av}). The term maximum averaging time is used to denote that period composed of a number of conduction and adequate rest intervals, which ensures that the tube is operated within the permissible ionization and vapour pressure limits. The maximum averaging time varies inversely with the value of V_a.

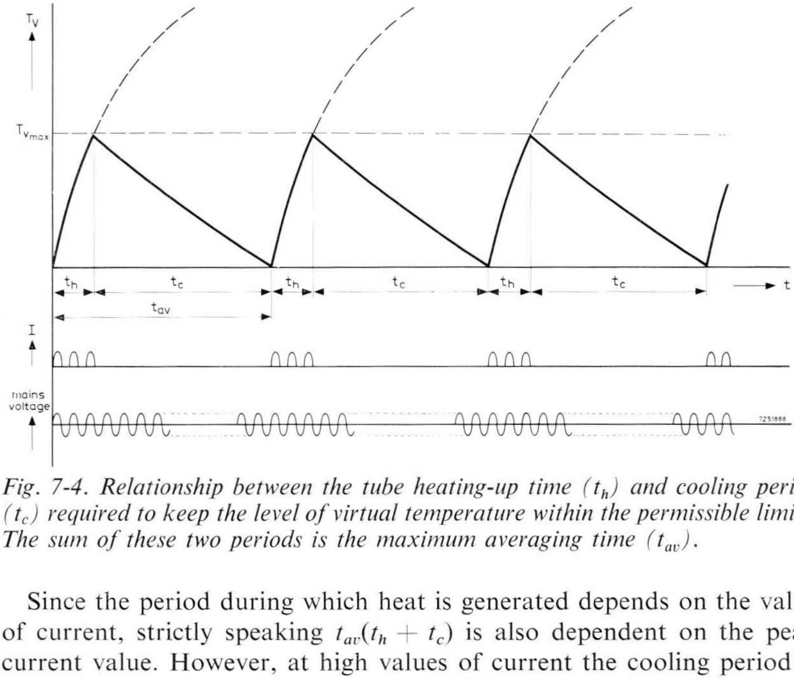

Fig. 7-4. Relationship between the tube heating-up time (t_h) and cooling period (t_c) required to keep the level of virtual temperature within the permissible limits. The sum of these two periods is the maximum averaging time (t_{av}).

Since the period during which heat is generated depends on the value of current, strictly speaking $t_{av}(t_h + t_c)$ is also dependent on the peak current value. However, at high values of current the cooling period t_c is much longer than t_h, thus for reasons of simplicity t_{av} is assumed under these conditions to be independent of the peak current.

Because T_v varies inversely with V_a (Fig. 7-2) the duration of period t_c is also dependent on this factor, which in turn influences the maximum averaging time. At lower current values t_c becomes much shorter as the heat dissipated is considerably less, so that t_{av} is then dependent on peak current. Notwithstanding this, t_{av} is normally considered as being a function of anode voltage only: $t_{av\ \max} = \mathrm{f}(V)$ (Fig. 7-5). This is further explained as follows.

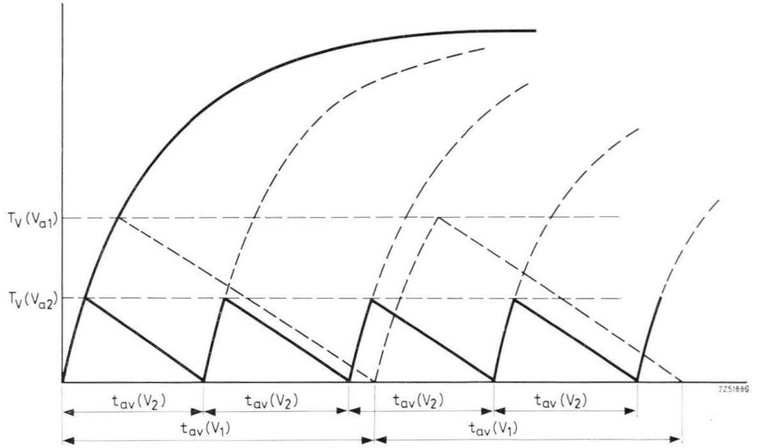

Fig. 7-5. Maximum averaging time as a function of anode voltage with permissible limits of virtual temperature.

At high peak currents the ignitron ratings specified for a particular service are determined giving due consideration to the limiting factors described above. Since during operation the generation of heat occurs very rapidly, it is necessary to stringently control the time during which current flows so that I_{av} is limited to a level much lower than its maximum value. Thus, because the rated cooling capability of the tube is based on a figure of $I_{av\ \max}$ the overall tube temperature will be much lower, enabling maximum cooling of the mercury to be obtained so that its temperature is kept at a low level. However, at lower peak current levels and correspondingly high values of I_{av}, it is necessary to ensure adequate cooling of the anode. Under these conditions the cooling capability of the tube is shared between that necessary for keeping the mercury pressure at a safe level, and the amount required for adequate anode cooling. Fig. 7-6 shows the minimum continuous water flow required to maintain two ignitrons cooled in series, within their safe operating limits (two type ZX1052 in this example). In the graph, values of permissible average current up to 140 A ($I_{av\ \max}$) are plotted against the inlet water

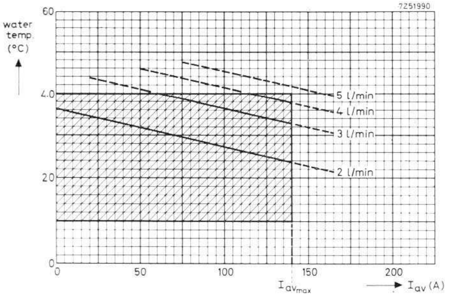

Fig. 7-6. Minimum continuous water flow required to ensure adequate tube cooling, at values of average current up to the maximum permissible level ($I_{av\ \max}$).

temperature for different recommended rates of water flow (in litres/min.).

Owing to the long thermal time constant of the anode it can be generally assumed that a residual level of tube virtual temperature exists, which effectively shortens the period during which heat is generated. Figs. 7-7*a*, *b*, *c* and *d* are four separate graphs showing the relationship between t_h, t_c and maximum t_{av} at different current levels; in the last example the effect of the residual level of T_v is taken into account. In Fig. 7-7*a* at a high value of peak current and lower level of I_{av}, time t_h is much shorter than t_c so that the maximum averaging time t_{av} almost approximates to t_c. At a low peak current level and higher I_{av} (Fig. 7-7*b*) T_v remains well within the permissible limit, the limiting factor being the anode temperature (T_a) which must be kept below the maximum acceptable value ($T_{a\ \max}$).

With lower peak current levels T_a tends to be high, however T_v remains below the maximum permissible level (Fig. 7-7*c*). Neglecting here the residual level of T_v, t_h is approximately equal to t_c with the result that t_{av} is much longer than in Fig. 7-7*a*. With the same level of current and considering the residual level of virtual temperature (Fig. 7-7*d*), the rate of rise of T_v is similar to that of the preceding example. However, the generation of heat occurs within a much shorter time owing to the presence of the residual temperature. Moreover, since the greater part of the available cooling capacity is required for the anode at the expense of mercury cooling, the fall in T_v is shortened in time.

The outcome is that t_h is longer and t_c shorter than in Fig. 7-7*a*. The maximum averaging time $t_{av}(t_h + t_c)$ in each operating condition remains however, virtually unchanged. Thus for practical reasons t_{av} is assumed to be constant over the expected operating current range.

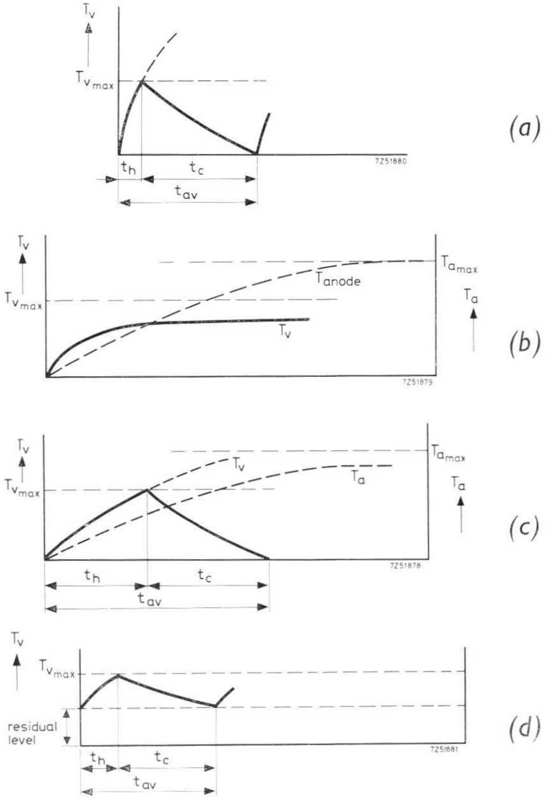

Fig. 7-7. (a), (b), (c), (d). Relationship between the tube heating-up and cooling periods and maximum permissible averaging time, with respect to the level of virtual temperature, at different values of peak (I_p) *and average* (I_{av}) *current.*

7.5 Ignitron Ratings

It can be deduced from the foregoing that the ignitron ratings may be determined when the following factors are known:

- the actual virtual temperature T_v with time, for a given value of operating current;
- the maximum permissible virtual temperature with a given anode voltage V_a;
- the value of the expected maximum average current I_{av};

- the expected maximum peak current I_p with respect to the absolute maximum, compatible with the physical dimensions of the tube;
- the tube's cooling characteristics i.e. the water flow rate required for adequately cooling the anode and mercury pool, taking into account the level of the residual virtual temperature with average current and its effect on the conduction and cooling periods.

By way of example, the tube ratings of the type ZX1052 ignitron are explained with the aid of Figs. 7-8*a*, *b* and *c* as follows. For Fig. 7-8*a* a compound graph has been constructed consisting of three different sections. In section I, T_v is plotted against time for several levels of current. The same ordinate of T_v is shared by section II where maximum T_v is shown as a function of anode voltage V_{rms}. Section III shares a common time abscissa with part I, the ordinate being graduated in log values of r.m.s. current. The maximum permissible time (t) during

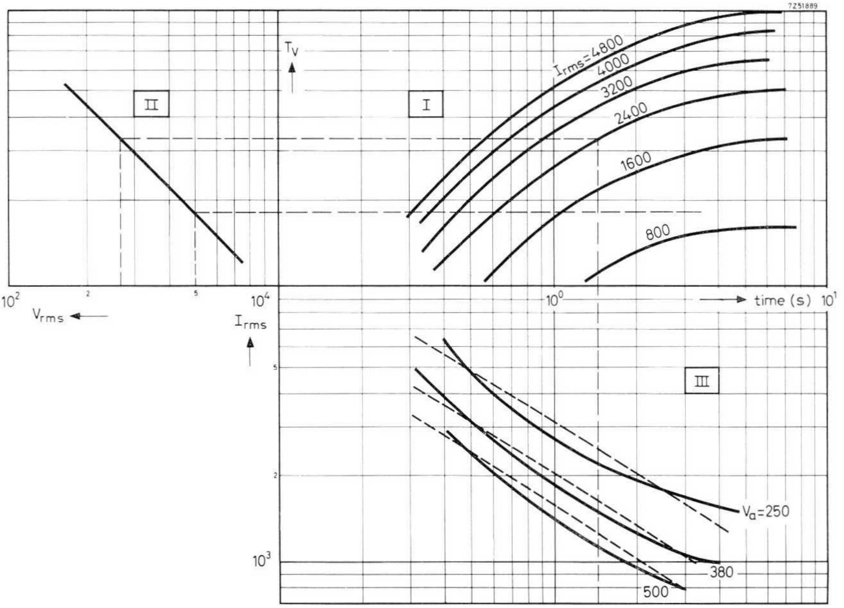

Fig. 7-8. (a) Ratings of the type ZX1052 ignitron showing the relationship between virtual temperature (T_v), anode voltage (V_{rms}) and time, for several values of r.m.s. current (I_{rms}). The maximum permissible conduction time with the corresponding maximum value of I_{rms} which may be passed during this time, at a certain level of V_{rms}, can be found in the graph.

which the tube can safely pass a particular value of current without an inadmissible increase in T_v occurring, can be derived from the graph as follows.

Assuming a certain value of anode voltage (V_{rms}) e.g. 250 V, on the left-hand side of the graph: a vertical line drawn to the slope of line $T_v = \mathrm{f}(V)$ followed by a horizontal one drawn between the point of intersection and ordinate T_v, gives the maximum permissible T_v at this voltage. Another horizontal line drawn from this point on the T_v scale intersects the curves representing several values of operating currents. By dropping a perpendicular from for example, the point of intersection of the current curve for 2400 A to the abscissa, the maximum time during which the tube may be allowed to pass this value of current may be derived ($t \approx 1.4$ s in this instance). Extending the perpendicular below the line so that it intersects the curves representing the variation in r.m.s. current with time at different values of V_a, gives the maximum permissible value of I_{rms} current which may be passed during this time, at a particular value of V_a. Since an ample safety margin is allowed by keeping $T_{v\,\max}$ within tolerable limits, the curves may be considered as consisting of straight lines (shown broken).

The permissible conduction time at a particular value of V_a being derived from Fig. 7-8*a*, the averaging time for the tube can be obtained from the data in order to determine the percentage duty cycle. In this instance the specified averaging time is 14 s thus:

$$\delta = (t/14)\,100,$$

where t is the conduction time, from which the curve of Fig. 7-8*b* is

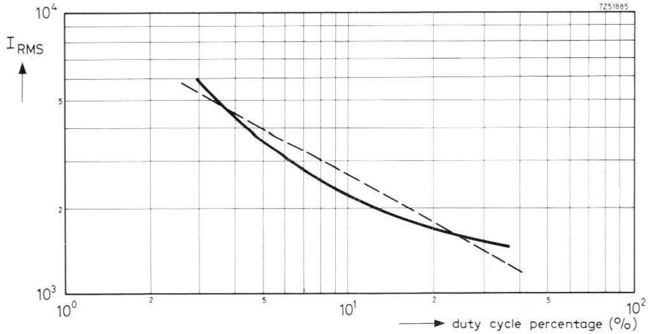

Fig. 7.8 (b) Graph showing the percentage duty cycle (δ) for values of I_{rms}.

constructed. In the graph the percentage duty cycle can be obtained for each value of I_{rms}; the curve can again be represented as a straight line.

All the tube parameters appropriate to the type ZX1052 ignitron are shown together in Fig. 7-8*c*. Lines *EE*, *FF* and *F'F'* at the upper left-hand side of the graph, share a common ordinate of r.m.s. current (right-hand edge) with the lines representing the tube operating limits, drawn on the right-hand side. The time scale at the left-hand edge of the graph applies to the averaging time (t_{av}) characteristic only. In constructing the graph, that of Fig. 7-8*b* representing the variation of r.m.s. current with percentage duty cycle, is reproduced again to provide a basis for deriving the various curves. This is shown by the line *BC* which in this example, applies to an anode voltage of 250 V. The line represents the limits of I_{rms} and duty cycle necessary to maintain the virtual temperature at an acceptable level.

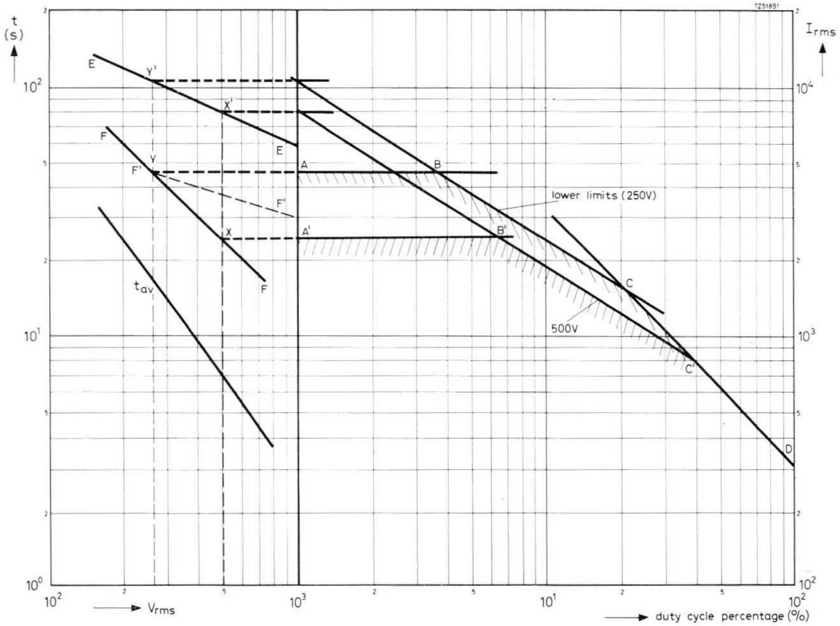

Fig. 7.8 (c) Complete parameters of the type ZX1052 ignitron showing the lower tube operating limits.

Another limitation is imposed by the maximum value of average current which can be passed without causing the anode to become overheated. This value is an intrinsic tube constant, governed by the heat dissipative ability of the anode.

The curve CD takes this quantity into account and is derived by using the formula:

$$I_{av} = \delta I_{rms} \sqrt{2}/\pi,$$

where δ is the duty cycle percentage.
Thus:

$$I_{rms} = 1/\delta \, (\pi/\sqrt{2}) I_{av},$$

for the type ZX1052 tube $I_{av\ \max} = 140$ A (from data), whence:

$$I_{rms\ \max} = 310/\delta \mathrm{A},$$

which is the same for all values of V_a.

Another factor to be considered is the maximum peak current which the tube can handle without the risk of breakdown. The peak current limit is dependent on voltage as depicted by the line FF on the left-hand side of the graph. To relate this factor to the tube operating limits in the graph, a vertical line corresponding to an anode voltage of 250 V is drawn, which intersects lines FF and EE at points Y and Y'. From point Y a horizontal line is constructed, section AB of which intersects the I_{rms}/duty cycle curve at point B. The three linear segments AB, BC and CD together form a curve (A,B,C,D) representing the lower operating limits of the tube. For the higher current, uprated tube (Type ZX1062 is this example) line $F'F'$ (shown broken) is given, $I_{rms\ \max}$ again being plotted with voltage.

By constructing another vertical line corresponding to an anode voltage of 500 V, which intersects EE and FF at points X and X', the tube limits at this voltage are obtained from which the curve A',B',C',D is drawn. Line EE which corresponds with that showing the variation in T_v with V_{rms} in Fig. 7-8*a*, enables the datum point of the limit of T_v for different values of voltage to be established. Finally, the curve representing averaging time t_{av} with voltage is drawn on the lower left-hand side of the graph.

The numerous factors which influence the operating conditions of an ignitron are equally applicable to both single- and three-phase systems. However, when the tubes are used in three-phase service, the level of the virtual temperature must be kept within even more stringent limits to ensure correct tube switching (commutation factor = $\mathrm{d}i/\mathrm{d}t$, $\mathrm{d}v/\mathrm{d}t$). The tube parameters are thus derated for three-phase applications.

7.5.1 Practical Examples

In selecting the most suitable type of ignitron for a particular application it is essential that the user be conversant with the following three factors:

— the value of mains voltage and frequency at the installation site;

— the r.m.s. current value or alternatively, the demand power in kVA from which the value of I_{rms} can be calculated:

$$I_{rms} = P/V_{rms},$$

where P is the apparent power in VA;

— the required duty cycle:

$$\delta = (\text{conduction time/repetition time})\ 100.$$

The duty cycle percentages under which a particular tube may be operated, at different values of current and voltage, can be obtained from the relevant graph in the Appendix.

Example 1

Let us consider a single-phase resistance welding machine employing type ZX1052 tubes, which performs 10 welds per minute. Each weld occupies 6 cycles of the 500 V, 50 Hz mains supply; the tube conduction time is therefore equal to 6 times the mains period. Thus:

$$\text{averaging time } t_{av} = 60/10 = 6 \text{ s},$$

so that the weld repetition time $= 6 \times 50 = 300$ mains cycles, whence:

$$\text{duty cycle } \delta = (6/300)100 = 2\%.$$

Under these conditions the averaging time is shorter than the maximum permissible value specified for the tube (7 s), thus no further design problems are presented.

Example 2

Let us now consider an operation employing the same type of tube, which entails a longer averaging time. The welding installation in this example is again driven from 500 V, 50 Hz a.c. mains, and developes a primary power of 1200 kVA. The machine is required to make 6 welds/min., each weld occupying 35 mains cycles. The value of r.m.s. current is:

$$I_{rms} = P/V_{rms} = 1200 \times 10^3/500 = 2400\ A_{rms},$$

and,

$$t_{av} = 60/6 = 10 \text{ s},$$

which represents a weld repetition time of: $10 \times 50 = 500$ cycles. Thus:

$$\delta = (35/500)100 = 7\%.$$

In the relevant graph for the type ZX1052 tube (see Appendix) with a voltage of 500 V rms, an r.m.s. current of 2400 A at a 7 % duty cycle falls just within the permissible limits. However, from the curve for t_{av} shown, the maximum permissible averaging time at this value of voltage is 7 s. Since this is shorter than the averaging time required for the operation under consideration (10 s), use of this type of ignitron is impracticable. In these circumstances it is necessary to select a more suitable type of tube. The type ZX1062 ignitron for instance, would be appropriate since it has a $t_{av\ \max}$ of 10.5 s at 500 V and a maximum duty cycle of 12 % at 2400 A.

Example 3

With the same installation and operating conditions as in the previous example, the maximum number of tube conduction periods is calculated as follows. From the relevant graphs for the ZX1052 tube, with an r.m.s. current of 2400 A a maximum duty cycle of 7 % is obtained, the value specified for t_{av} at a mains voltage of 500 V being 7 s.

The maximum number of tube conduction periods (n) can be calculated by means of the formula:

$$n = (\delta/100)\, f\, t_{av\ \max}$$

where f is the mains frequency, thus:

$$n = (7/100)50 \times 7 \approx 25 \text{ conduction periods,}$$

which is less than that required (ref. example 2).

The foregoing examples are typical of relatively simple welding programmes only. With complex programmes on the other hand, rather more difficult problems are encountered. For instance, when a programme is required which involves a number of separate current and pressure control operations, it is necessary to consider the most unfavourable part of the welding cycle, i.e. when the heaviest current is passed, in relation to the longest averaging time.

Example 4

Let us now consider a typical welding programme, employing once more a welding machine equipped with type ZX1052 tubes. The machine is supplied by 500 V, 50 Hz a.c. mains, is rated at 1200 kVA and performs three welds/min. The required welding programme comprises a pre-heat time during which phase control is applied so that current flows at a reduced level, and a weld-time when the full welding current is passed. The programme (Fig. 7-9) involves simultaneous control of mechanical pressure on, and current through the workpiece. In the initial stage of the programme, 3 s is allowed for inserting the workpiece; the sequence is then similar to that described in ch. 4, sect. 4.1.4.

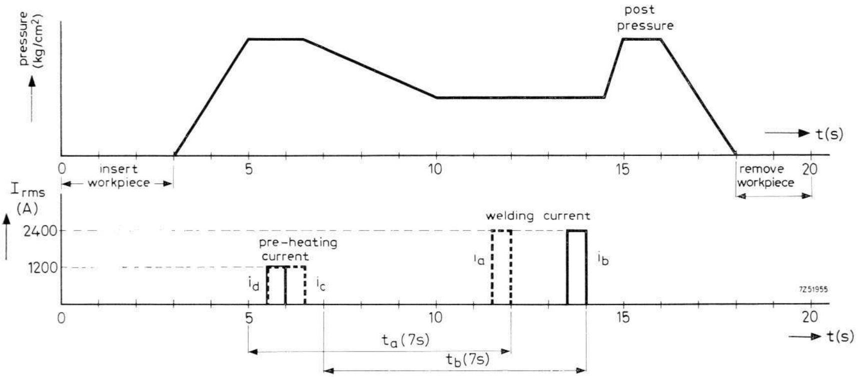

Fig. 7-9. Practical resistance welding programme. The choice of welding pulse i_a *or* i_b *is dependent on tube averaging time, whilst that of the pre-heating pulse* i_c *or* i_d *is based on full-cycle conduction duty.*

Referring to the drawing, the period from 3 to 5 s constitutes the *squeeze-time* during which pressure is exerted on the workpiece. This is followed by the *pre-heat time* which subject to the factors discussed later, is chosen to fall within one of the periods 5.5 to 6 s (current i_d) or 5.5 to 6.5 s (current i_c). The electrode pressure is then reduced in the period from 6.5 to 10 s, in order to prevent complete merging of the workpiece parts during the stage which follows.

The full welding current is applied during the subsequent *weld-time* which in the example given, may fall within either of the two periods from 11.5 to 12 s (current i_a) or 13.5 to 14 s (current i_b). The current is switched off at the end of the weld-time and the *hold-time* begins, lasting from 14.5 to 16 s during which the workpiece cools down at high pressure. Sixteen seconds after commencing the programme the *off-time* is reached and the final operation carried out. This entails separating the welding electrodes and removing the workpiece, for which a total of 4 s is allowed. The complete programme in this example has thus a duration of 20 s. Let us now examine the relationship in this type of programme, of the pre-heating and main welding current pulses to the tube averaging time, at a 7% duty cycle.

Considering first the welding pulses i_a and i_b. It can be seen in the drawing that the pulses each have a maximum value of 2400 A rms over a time of 0.5 s, which represents a total of 25 mains cycles during the welding programme. The welding pulses i_a and i_b appear within the specified maximum averaging time of 7 s (times t_a and t_b respectively). Pulse i_a occurs at the end of time t_a, which in the absence of any other pulses would be quite acceptable. However, the pre-heating pulses i_c or i_d also lie within time t_a, which under the required operating conditions (7% duty cycle at 2400 A rms) means that the occurrence of a further pulse during this time is unacceptable. Pulse i_b on the other hand, lies outside time t_a. It is thus possible for the pre-heating and welding pulses to occur in two separate periods which do not overlap. This is compatible with the stated operating requirements and is thus permissible.

Let us now consider the pre-heating pulses i_c and i_d. Pulse i_c has a maximum value of 1200 A over 1 s, which represents 50 mains cycles during the welding programme. The phase-controlled, reduced pre-heat current of 1200 A flows throughout the pre-heating time, however, because the tube limiting values are based on full cycle conduction duty (see ch. 8) the full current of 2400 A must be considered here. In Fig. 7-9 it is not permissible to pass a 1 s current pulse (i_c) of 2400 A during only 25 mains cycles. However, pulse i_d which is of 0.5 s duration, can be passed in exactly 25 cycles and is thus suitable.

Example 5

Assuming now a single-phase 400 kVA welding machine driven from 500 V, 50 Hz mains, which carries out 6 welds/min. Each weld occupies 25 mains cycles at full current, and 75 cycles which constitute the preheating time, at half the current value; the reduction in current is again obtained by means of phase control. Each welding operation thus occupies a total of 100 cycles. The interval between applying the preheating and welding currents is 2 s.

Thus:

$$I_{rms} = 400 \times 10^3/500 = 800 \text{ A rms},$$

and,

$$t_{av} = 60/6 = 10 \text{ s},$$

which represents a weld repetition time of $10 \times 50 = 500$ cycles, whence:

$$\delta = (100/500)100 = 20\%.$$

The type ZX1051 ignitron can pass a current of 800 A rms at a duty cycle of up to 12 % only (see Appendix). For this installation it is thus necessary to select a type ZX1052 tube, which has a permissible duty cycle at 500 V, 800 A rms of 42 %. The maximum permissible averaging time for this tube is 7 s which is less than the required 10 s, so that a weld repetition time of $7 \times 50 = 350$ cycles results. However, since:

$$\delta = (100/350)100 = 28.5\%,$$

which is less than the specified maximum of 42 %, this is acceptable.

Note. The foregoing calculations are based on the published ratings of the ignitrons. Since the manufacturer is unable to anticipate where the line between the nominal and maximum values is to be drawn (the extent of the spread and the magnitude of voltage fluctuations obviously cannot be predicted), it is customary to use the *Absolute Maximum Rating System* when stating the tube parameters.

7.5.2 Absolute Maximum Rating System

Absolute maximum ratings are limiting values of operating and environmental conditions applicable to any electronic device of a specified type, as defined by the relevant published data. They are established by the manufacturer to ensure acceptable serviceability of the device. No responsibility is assumed for equipment or environmental variations and the effects of changes in operating conditions, which may arise from alterations in the characteristics of the particular device, or of other electronic devices in the same equipment.

The manufacturer of equipment in which the device is used should ensure that the design is such that both initially and throughout the life of the device, *the absolute maximum values for the intended service are not exceeded under possible worst-case operating conditions.* To meet this requirement the equipment must be designed giving due consideration to the following:

- possible changes in supply voltage and component characteristics;
- changes in the degree of equipment control and adjustment;
- possible signal and load variations;
- alterations in environmental conditions;
- changes in the characteristics of the particular device and of other electronic devices in the same equipment.

8 Technical Data

The information and data contained in this chapter are current at the date of issue. The latest information on existing and newly-introduced tube types can be obtained on written request to the manufacturer.

8.1 Quick Reference Data

8.1.1 Electrical

Table A

Tube Type No.	ZX1051	ZX1052	ZX1053	ZX1061	ZX1062
Max. demand power (anti-parallel configuration):	600 kVA	1200 kVA	2400 kVA	1200 kVA (at 600 V rms)	2300 kVA (at 600 V rms)
Max. average current ($I_{av\ \max}$):	56 A	140 A	355 A	70 A	180 A
Igniter voltage (V_{ig}):	150 V	150 V	200 V max	150 V	150 V
Igniter current (I_{ig}):	12 A max	12 A max	15 to 30 A	12 A max	12 A max

8.1.2 Mechanical

Table B

Tube Type No.	ZX1051	ZX1052	ZX1053	ZX1061	ZX1062
Dimensions and connections:	see Fig. 8-1	see Fig. 8-4	see Fig. 8-5	see Fig. 8-6	see Fig. 8-7
Net weight:	1.42 kg ($\approx$ 3 lb)	2.82 kg ($\approx$ 6 lb)	9.4 kg ($\approx$ 20 lb)	1.66 kg ($\approx 3\frac{1}{4}$ lb)	2.9 kg (6 lb)
Shipping weight:	2.04 kg ($\approx$ 4 lb)	4.08 kg ($\approx 8\frac{3}{4}$ lb)	12 kg (26 lb)	2.28 kg ($\approx 4\frac{1}{2}$ lb)	4.16 kg ($\approx$ 9 lb)
Mounting position:	vert. ± 3° anode conn. uppermost	vert. ± 3° anode conn. uppermost	vert. ± 3° anode conn. uppermost	vert. ± 3° anode conn. uppermost	vert. ± 3° anode conn. uppermost

8.1.3 Common Accessories (All Tubes)

Igniter cable:	type 55351
Water hose connections	
— hose nipple:	type TE1051c
— coupling nut:	type TE1051b
Overload protection thermostat:	type 55306 or 55318
Water economy thermostat:	type 55305 or 55317

8.2 Ignitron Type ZX1051

B-size ignitron intended for use in single-phase and three-phase resistance welding control and similar a.c. control applications. The tube has a plastic-coated stainless steel water cooling jacket, quick change water connections and a temperature sensing pad for mounting a thermostat.

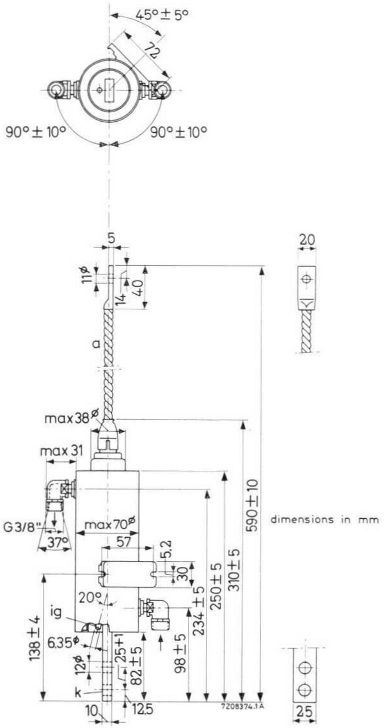

Fig. 8-1 Mechanical diagram of type ZX1051 ignitron.

8.2.1 Temperature Limits and Cooling

Typical Characteristics

Pressure drop of cooling water ($q = 2$ l/min):	p_i	0.08 kg/cm^2	(≈ 1.1 lb/in^2)	max.
Temperature rise at max. average current ($q = 2$ l/min):	T_o-T_i	6 °C	(43 °F)	max.

Limiting Values (Absolute Maximum Ratings)

SINGLE-PHASE A.C. CONTROL SERVICE

Required water flow at max. average current (ref. also Appendix):	q	2 l/min	(≈ 0.5 gall/min)	min.
Inlet temperature * :	T_i	10 °C 40 °C	(50 °F) (104 °F)	min. max.
Temperature of thermostat mounting † :	T_m	50 °C	(122 °F)	max.

INTERMITTENT RECTIFIER SERVICE OR THREE-PHASE A.C. CONTROL SERVICE

Required continuous water flow at max. average current:	q	2 l/min	(≈ 0.5 gall/min)	min.
Inlet temperature * :	T_i	10 °C 35 °C	(50 °F) (95 °F)	min. max.
Temperature of thermostat mounting † :	T_m	45 °C	(113 °F)	max.

PULSED SERVICE

Under conditions of pulsed service with a low average value of load current (<1 A), continuous cooling is normally not required. The cooling jacket can then be permanently filled with a coolant such as oil. Care must be taken to prevent condensation of mercury on the anode or the glass seal, (ref. ch. 5 sect. 5.2.2).

Recommended condensed mercury temperature:	T_{Hg}	25 to 30 °C (77 to 86 °F)

---

* See note 1

† See note 2

8.2.2 Electrical Data

Limiting Values (Absolute Maximum Ratings)

The limiting values are based on full-cycle conduction duty with the load equally distributed over all the tubes, regardless of whether phase control is used. The load must be limited so that with no phase control applied the tubes are not overloaded.

SINGLE-PHASE A.C. CONTROL SERVICE (TWO TUBES CONNECTED IN ANTI-PARALLEL)

See Table *C* and Appendix.

Table C

Mains frequency range:	f	25 to 60					Hz
Mains voltage:	V	220*	250	380	500	600	V rms
Max. averaging time:	$t_{av\ max}$	18	18	11.8	9	7.5	s
Max. demand power:	P_{max}	530	600	600	600	600	kVA
Corresponding max. average current:	$I_{av\ max}$	30.2	30.2	30.2	30.2	30.2	A
Demand current:	I_{rms}	2400	2400	1600	1200	1000	A rms
Duty cycle:	δ	2.8	2.8	4.2	5.6	6.7	%
Number of cycles within $t_{av\ max}$†:	n	25	25	25	25	25	c/$t_{av\ max}$
Integrated r.m.s. load current:	I_F	400	400	320	280	260	A rms
Max. average current:	$I_{av\ max}$	56	56	56	56	56	A
Corresponding max. demand power:	P_{max}	180	200	200	200	200	kVA
Demand current:	I_{rms}	800	800	530	400	330	A rms
Duty cycle:	δ	15.6	15.6	23.5	31.1	37.7	%
Number of cycles within $t_{av\ max}$†:	n	140	140	140	140	140	c/$t_{av\ max}$
Integrated r.m.s. load current:	I_F	320	320	260	220	200	A rms
Max. surge current ($t_{max} = 0.15$ s):	I_{surge}	6700	6700	4500	3400	2800	A

* See note 3

† See note 4

Intermittent Rectifier Service or Three-Phase A.C. Control Service

Table D

Mains frequency range	f	50 to 60		Hz
Anode voltage, forward peak:	$V_{a\,fwd_p\,\max}$	1200	1500	V
reverse peak:	$V_{a\,rev_p\,\max}$	1200	1500	V
Max. peak current:	$I_{p\,\max}$	600	480	A
Corresponding average current:	I_{av}	5	4	A
Max. average current:	$I_{av\,\max}$	22.5	18	A
Corresponding peak current:	I_p	135	108	A
Max. averaging time:	$t_{av\,\max}$	10	10	s
Ratio I_a:I_p ($t_{av\,\max} = 0.5$ s):	$I_a/I_{p\,\max}$	1/6	1/6	
Ratio I_{surge}:I_p ($t_{\max} = 0.15$ s):	$I_{surge}/I_{p\,\max}$	12.5	12.5	

Pulsed Service

Under certain conditions this ignitron can be used to switch aperiodic current pulses of a very high value (up to 50 kA) and voltages of up to 10 kV. The performance depends on the circuit in which the tube is used; for further information the manufacturer should be consulted.

8.2.3 Igniter Characteristics and Ignition Circuit Requirements

Limiting Values (Absolute Maximum Ratings)

Igniter voltage, forward peak:	$V_{ig\ p}$	2000 V	max.
reverse peak (including any transients):	$-V_{ig\ p}$	5 V	max.
Igniter current, forward peak:	$I_{ig\ p}$	100 A	max.
reverse peak:	$-I_{ig\ p}$	0 A	max.
forward r.m.s.:	$I_{ig\ rms}$	10 A	max.
forward average ($t_{av\,\max} = 5$ s):	I_{ig}	1 A	max.

Self-Excitation

Igniter Characteristics

Ignition voltage:	V_{ig}	150 V	
Ignition current:	I_{ig}	6 to 8 A	(12 A max.)
Ignition time at the above values of voltage or current *:	t_{ig}	50 μs	max.

---

* See note 5

IGNITION CIRCUIT REQUIREMENTS

Peak voltage required to fire:	V_p	200 V	min.
Peak current required to fire:	I_p	12 A	min.
Rate of rise of igniter current:	$\mathrm{d}i/\mathrm{d}t$	0.1 A/μs	min.

IGNITION CIRCUITS

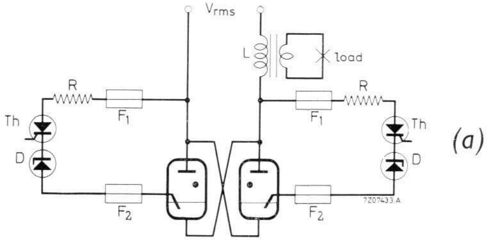

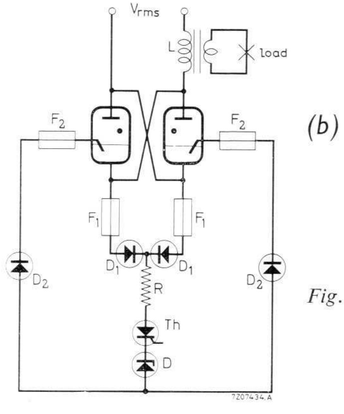

Fig. 8-2 Recommended circuits for self-excitation *.
(*a*) *Self-excitation with separate thyristors.*
(*b*) *Self-excitation with common thyristor.*

Table E. Recommended circuit values.

V_{rms}	220	250	380	500	600	V
R	2	2	4	5	6	Ω
F_1	2 A fast response time					
F_2	10 A fast response time					
D	voltage regulating diode V ⩾ 18 V					

---

* See note 6

Separate Excitation

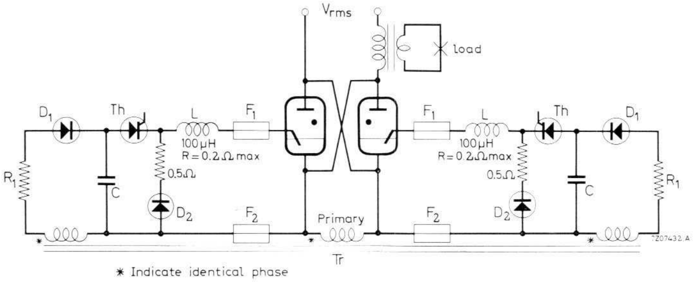

Fig. 8-3 Recommended circuit for separate excitation *.

Table F. Recommended circuit values.

Capacitor value:	C	2	8	µF
Capacitor voltage:	V_c	650	400	V ± 10%
Peak value of closed circuit current:		80 to 100		A

8.3 Ignitron Type ZX1052

C-size ignitron intended for use in single-phase resistance welding control and similar a.c. control applications. The tube has a plastic-coated stainless steel water cooling jacket, quick change water connections and a temperature sensing pad for mounting a thermostat.

8.3.1 Temperature Limits and Cooling

Typical Characteristics

Pressure drop of cooling water (q = 5 l/min):	p_i	0.16 kg/cm^2	(≈ 2.3 lb/in^2)	max.
Temperature rise at max. average current (q = 5 l/min):	T_o-T_i	6 °C	(43 °F)	max.

---

* See note 7

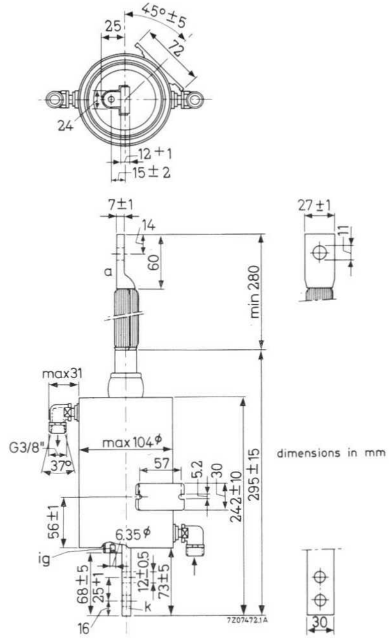

Fig. 8-4 Mechanical diagram of type ZX1052 ignitron.

Limiting Values (Absolute Maximum Ratings)

SINGLE-PHASE A.C. CONTROL SERVICE

Required water flow at max. average current (ref. also Appendix):	q	5 l/min	(1.05 gall/min)	min.
Inlet temperature*:	T_i	10 °C	(50 °F)	min.
		40 °C	(104 °F)	max.
Temperature of thermostat mounting†:	T_m	50 °C	(122 °F)	max.

PULSED SERVICE

Ref. sect. 8.2.1.

8.3.2 Electrical Data

Limiting Values (Absolute Maximum Ratings)

See sect. 8.2.2.

---

* See note 1 † See note 2

Single-Phase A.C. Control Service (Two Tubes Connected in Anti-Parallel)

See Table *G* and Appendix.

Table G

Mains frequency range:	f	25 to 60					Hz
Mains voltage:	V	220*	250	380	500	600	V rms
Max. averaging time:	$t_{av\ \max}$	14	14	9.4	7	5.8	s
Max. demand power:	$P_{\max}$	1060	1200	1200	1200	1200	kVA
Corresponding max. average current:	$I_{av\ \max}$	75.6	75.6	75.6	75.6	75.6	A
Demand current:	I_{rms}	4800	4800	3150	2400	2000	A rms
Duty cycle:	δ	3.5	3.5	5.3	7.0	8.4	%
Number of cycles within $t_{av\ \max}$†:	n	25	25	25	25	25	c/$t_{av\ \max}$
Integrated r.m.s. load current:	I_F	900	900	720	630	580	A rms
Max. average current:	$I_{av\ \max}$	140	140	140	140	140	A
Corresponding max. demand power:	$P_{\max}$	350	400	400	400	400	kVA
Demand current:	I_{rms}	1600	1600	1050	800	660	A rms
Duty cycle:	δ	19.4	19.4	29.5	39.0	47.0	%
Number of cycles within $t_{av\ \max}$†:	n	140	140	140	140	140	c/$t_{av\ \max}$
Integrated r.m.s. load current:	I_F	700	700	570	500	450	A rms
Max. surge current ($t_{\max} = 0.15$ s):	I_{surge}	13.5	13.5	9.0	6.7	5.7	kA

Pulsed Service

Under certain conditions this ignitron can be used to switch aperiodic current pulses of a very high value (up to 100 kA) and voltages of up to 10 kV. The performance depends on the circuit in which the tube is used; for further information the manufacturer should be consulted.

---

* See note 3

† See note 4

8.3.3 Igniter Characteristics and Ignition Circuit Requirements

Limiting Values (Absolute Maximum Ratings)

Igniter voltage, forward peak:	$V_{ig\,\mathrm{p}}$	2000 V	max.
reverse peak (including any transients):	$-V_{ig\,\mathrm{p}}$	5 V	max.
Igniter current, forward peak:	$I_{ig\,\mathrm{p}}$	100 A	max.
reverse peak:	$-I_{ig\,\mathrm{p}}$	0 A	max.
forward r.m.s.:	$I_{ig\,\mathrm{rms}}$	10 A	max.
forward average ($t_{av\,\max} = 5$ s):	I_{ig}	1 A	max.

Self-Excitation

IGNITER CHARACTERISTICS

Ignition voltage:	V_{ig}	150 V	
Ignition current:	I_{ig}	6 to 8 A	(12 A max.)
Ignition time at the above values of voltage or current * :	t_{ig}	50 µs	max.

IGNITION CIRCUIT REQUIREMENTS

Peak voltage required to fire:	V_p	200 V	min.
Peak current required to fire:	I_p	12 A	min.
Rate of rise of igniter current:	$\mathrm{d}i/\mathrm{d}t$	0.1 A/µs	min.

IGNITION CIRCUITS and *Separate Excitation*

See sect. 8.2.3.

8.4 Ignitron Type ZX1053

D-size ignitron intended for use in single-phase and three-phase resistance welding control and similar a.c. control applications. The tube has a plastic-coated stainless steel water cooling jacket, quick change water connections and a temperature sensing pad for mounting a thermostat.

8.4.1 Temperature Limits and Cooling

Typical Characteristics

Pressure drop of cooling water ($q = 9$ l/min):	p_i	0.35 kg/cm^2	(5 lb/in^2)	max.
Temperature rise at max. average current ($q = 9$ l/min):	T_o-T_i	9 °C	(≈ 48 °F)	max.

---

* See note 5

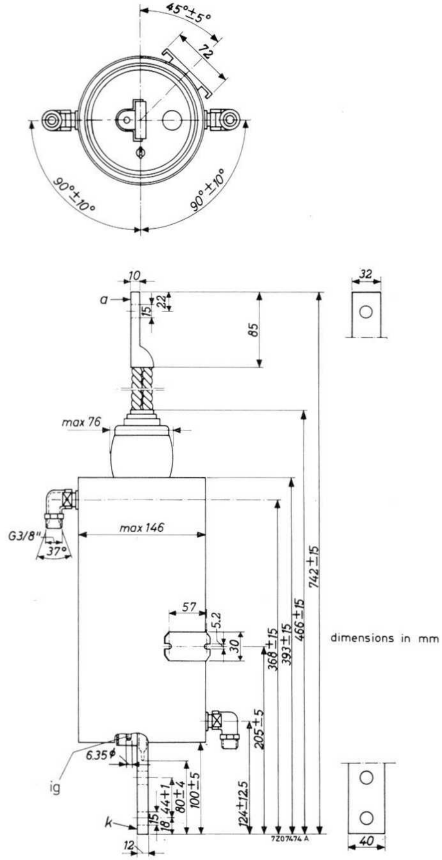

The dimensions of the type ZX1053 tube are listed below, together with the corresponding dimensions of the superseded PL5553B tube (shown in brackets).

ZX1053	*(PL5553B)*
711 ± 15	(742 ± 15)
447 ± 15	(466 ± 15)
361 ± 15	(393 ± 15)
336 ± 15	(368 ± 15)
215 max.	(205 ± 5)

Fig. 8-5 Mechanical diagram of type PL5553B ignitron. (replaced by type ZX1053).

Limiting Values (Absolute Maximum Ratings)

SINGLE-PHASE A.C. CONTROL SERVICE

Required water flow at max. average current:	q	9 l/min	(2 gall/min)	min.
Inlet temperature * :	T_i	10 °C 40 °C	(50 °F) (104 °F)	min. max.
Temperature of thermostat mounting † :	T_m	50 °C	(122 °F)	max.

---

* See note 1

† See note 2

INTERMITTENT RECTIFIER SERVICE OR THREE-PHASE A.C. CONTROL SERVICE

Required water flow at max. average current:	q	9 l/min	(2 gall/min)	min.
Inlet temperature *:	T_i	10 °C	(50 °F)	min.
		35 °C	(95 °F)	max.
Temperature of thermostat mounting **:	T_m	45 °C	(113 °F)	max.

8.4.2 Electrical Data

Limiting Values (Absolute Maximum Ratings)

See sect. 8.2.2.

SINGLE-PHASE A.C. CONTROL SERVICE (TWO TUBES CONNECTED IN ANTI-PARALLEL)

See Table *H* and Appendix.

Table H

Mains frequency range	f	25 to 60					Hz
Mains voltage:	V	220†	250	380	500	600	V rms
Max. averaging time:	$t_{av\ \max}$	11	11	7.3	5.6	4.6	s
Max. demand power:	$P_{\max}$	2120	2400	2400	2400	2400	kVA
Corresponding max. average current:	$I_{av\ \max}$	192	192	192	192	192	A
Demand current:	I_{rms}	9600	9600	6300	4800	4000	A rms
Duty cycle:	δ	4.4	4.4	6.8	8.8	10.6	%
Number of cycles within $t_{av\ \max}$ §:	n	25	25	25	25	25	c/$t_{av\ \max}$
Integrated r.m.s. load current:	I_F	2000	2000	1640	1420	1300	A rms
Max. average current:	$I_{av\ \max}$	355	355	355	355	355	A
Corresponding max. demand power:	$P_{\max}$	700	800	800	800	800	kVA
Demand current:	I_{rms}	3200	3200	2100	1600	1320	A rms
Duty cycle:	δ	24.6	24.6	37.5	49.3	60.0	%
Number of cycles within $t_{av\ \max}$ §:	n	140	140	140	140	140	c/$t_{av\ \max}$
Integrated r.m.s. load current:	I_F	1600	1600	1300	1130	1020	A rms
Max. surge current ($t_{\max} = 0.15$ s):	I_{surge}	27	27	17.8	13.5	11.2	kA

* See note 1 ** See note 2 † See note 3 § See note 4

INTERMITTENT RECTIFIER SERVICE OR THREE-PHASE A.C. CONTROL SERVICE

Table I

Mains frequency range:	f	50 to 60		Hz	
Anode voltage, forward peak:	$V_{a\,fwd_p\,\max}$	600	1200	1500	V
reverse peak:	$V_{a\,rev_p\,\max}$	600	1200	1500	V
Max. peak current:	$I_{p\,\max}$	4000	3000	2400	A
Corresponding average current:	I_{av}	54	40	32	A
Max. average current:	$I_{av\,\max}$	190	140	112	A
Corresponding peak current:	I_p	1140	840	672	A
Max. averaging time:	$t_{av\,\max}$	6.25	6.25	6.25	s
Ratio $I_a : I_p$ ($t_{av\,\max} = 0.5$ s):	$I_a/I_{p\,\max}$	1/6	1/6	1/6	
Ratio $I_{surge} : I_p$ ($t_{\max} = 0.15$ s):	$I_{surge}/I_{p\,\max}$	12.5	12.5	12.5	

8.4.3 Igniter Characteristics and Ignition Circuit Requirements

Limiting Values (Absolute Maximum Ratings)

Igniter voltage, forward peak:	$V_{ig\,p}$	2000 V	max.
reverse peak (including any transients):	$-V_{ig\,p}$	5 V	max.
Igniter current, forward peak:	$I_{ig\,p}$	100 A	max.
reverse peak:	$-I_{ig\,p}$	0 A	max.
forward r.m.s.:	$I_{ig\,rms}$	10 A	max.
forward average ($t_{av\,\max} = 5$ s):	I_{ig}	1 A	max.

Self-Excitation

IGNITER CHARACTERISTICS

Ignition voltage:	V_{ig}	200 V	max.
Ignition current:	I_{ig}	6 to 8 A	(12 A max.)
Ignition time at the above values of voltage or current *:	t_{ig}	100 μs	max.

IGNITION CIRCUIT REQUIREMENTS

Peak voltage required to fire:	V_p	200 V	min.
Peak current required for anode takeover †:	I_p	15 to 30 A	
Rate of rise of igniter current:	$\mathrm{d}i/\mathrm{d}t$	0.1 A/μs	min.

---

* See note 5 † See note 8.

IGNITION CIRCUITS

See sect. 8.2.3.

Separate Excitation *

See sect. 8.2.3.

Table J. Recommended circuit values

Capacitor value:	C	2	μF
Capacitor voltage:	V_c	650	V ± 10%
Peak value of closed circuit current:	80 to 100		A

8.5 Ignitron Type ZX1061

B-size ignitron intended for use in single-phase and three-phase resistance welding control and similar a.c. control applications. The tube has a plastic-coated stainless steel water cooling jacket, quick change water connections and a temperature sensing pad for mounting a thermostat.

8.5.1 Temperature Limits and Cooling

Typical Characteristics

Pressure drop of cooling water ($q = 3$ l/min):	p_i	0.1 kg/cm^2	(≈ 1.4 lb/in^2)	max.
Temperature rise at max. average current ($q = 3$ l/min):	T_o-T_i	5.5 °C	(42 °F)	max.

Limiting Values (Absolute Maximum Ratings)

SINGLE-PHASE A.C. CONTROL SERVICE

Required water flow at max. average current (see Appendix):	q	3 l/min	(≈ 0.7 gall/min)	min.
Inlet temperature † :	T_i	10 °C	(50 °F)	min.
		40 °C	(104 °F)	max.
Temperature of thermostat mounting ** :	T_m	50 °C	(122 °F)	max.

---

* See note 9. † See note 1. ** See note 2.

INTERMITTENT RECTIFIER SERVICE OR THREE-PHASE A.C. CONTROL SERVICE

Required continuous water flow at max. average current:	q	4 l/min	(0.85 gall/min)	min.
Inlet temperature * :	T_i	10 °C	(50 °F)	min.
		35 °C	(95 °F)	max.
Temperature of thermostat mounting † :	T_m	45 °C	(113 °F)	max.

PULSED SERVICE

Ref. sect. 8.2.1.

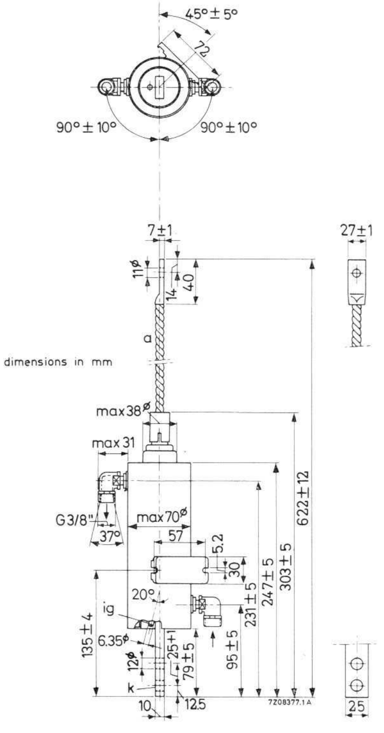

Fig. 8-6 Mechanical diagram of type ZX1061 ignitron.

8.5.2 Electrical Data

Limiting Values (Absolute Maximum Ratings)

See sect. 8.2.2.

---

* See note 1 † See note 2

SINGLE-PHASE A.C. CONTROL SERVICE (TWO TUBES CONNECTED IN ANTI-PARALLEL). See Table *K* and Appendix.

Table K.

Mains frequency range	f	25 to 60					Hz
Mains voltage: Max. averaging time:	V $t_{av\ \max}$	220* 24	250 24	380 15.8	500 12	600 10	V rms s
Max. demand power:	$P_{\max}$	550	630	850	1050	1200	kVA
Corresponding max. average current:	$I_{av\ \max}$	38	38	38	38	38	A
Demand current: Duty cycle:	I_{rms} δ	2500 3.3	2500 3.3	2250 3.8	2100 4.0	2000 4.2	A rms %
Number of cycles within $t_{av\ \max}$ †:	n	40	40	30	24	21	c/$t_{av\ \max}$
Integrated r.m.s. load current:	I_F	460	460	440	420	410	A rms
Max. average current:	$I_{av\ \max}$	70	70	70	70	70	A
Corresponding max. demand power:	$P_{\max}$	180	210	280	350	400	kVA
Demand current: Duty cycle:	I_{rms} δ	850 18.3	850 18.3	750 20.8	700 22.2	660 23.5	A rms %
Number of cycles within $t_{av\ \max}$ †:	n	220	220	164	134	118	c/$t_{av\ \max}$
Integrated r.m.s. load current:	I_F	360	360	340	330	320	A rms
Max. surge current ($t_{\max} = 0.15$ s):	I_{surge}	7000	7000	6300	5900	5600	A rms

INTERMITTENT RECTIFIER SERVICE OR THREE-PHASE A.C. CONTROL SERVICE

Table L

Mains frequency range	f	50 to 60		Hz
Anode voltage, forward peak: reverse peak:	$V_{a\ fwd_p\ \max}$ $V_{a\ rev_p\ \max}$	1200 1200	1500 1500	V V
Max. peak current: Corresponding average current:	$I_{p\ \max}$ I_{av}	1500 20	1200 16	A A
Max. average current: Corresponding peak current:	$I_{av\ \max}$ I_p	70 420	56 336	A A
Max. averaging time: Ratio I_a:I_p ($t_{av\ \max} = 0.5$ s): Ratio I_{surge}:I_p ($t_{\max} = 0.15$ s):	$t_{av\ \max}$ $I_a/I_{p\ \max}$ $I_{surge}/I_{p\ \max}$	6.25 1/6 12.5	6.25 1/6 12.5	s

PULSED SERVICE (Ref. sect. 8.2.2.)

---

* See note 3 † See note 4

8.5.3 Igniter Characteristics and Ignition Circuit Requirements

Limiting Values (Absolute Maximum Ratings)

Igniter voltage, forward peak:	$V_{ig\,\mathrm{p}}$	2000 V	max.
reverse peak (including any transients):	$-V_{ig\,\mathrm{p}}$	5 V	max.
Igniter current, forward peak:	$I_{ig\,\mathrm{p}}$	100 A	max.
reverse peak:	$-I_{ig\,\mathrm{p}}$	0 A	max.
forward r.m.s.:	$I_{g\,\mathrm{rms}}$	10 A	max.
forward average ($t_{av\,\mathrm{max}} = 5$ s):	I_{ig}	1 A	max.

Self-Excitation

Igniter Characteristics

Ignition voltage	V_{ig}	150 V	
Ignition current:	I_{ig}	6 to 8 A	(12 A max.)
Ignition time at the above values of voltage or current * :	t_{ig}	50 µs	max.

Ignition Circuit Requirements

Peak voltage required to fire:	V_p	200 V	min.
Peak current required to fire:	I_p	12 A	min.
Rate of rise of igniter current:	$\mathrm{d}i/\mathrm{d}t$	0.1 A/µs	min.

Ignition Circuits

See sect. 8.2.3.

Separate Excitation

See sect. 8.2.3.

8.6 Ignitron Type ZX1062

Uprated C-size ignitron intended for use in single-phase resistance welding control and similar a.c. control applications. The tube has a plastic-coated stainless steel water cooling jacket, quick change water connections and a temperature sensing pad for mounting a thermostat.

---

* See note 5

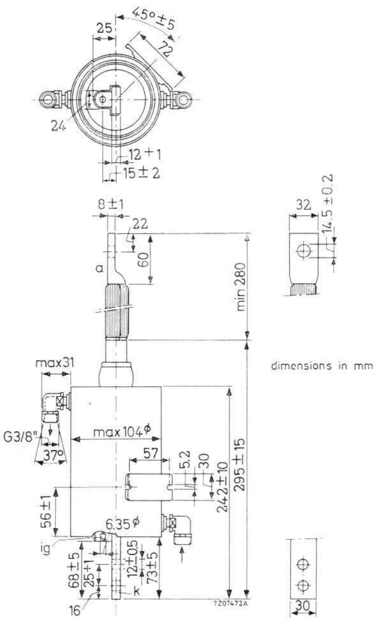

Fig. 8-7 Mechanical diagram of type ZX1062 ignitron.

8.6.1 Temperature Limits and Cooling

Typical Characteristics

Pressure drop of cooling water ($q = 6$ l/min):	pi	0.2 kg/cm^2	($\approx$ 2.8 lb/in^2)	max.
Temperature rise at max. average current ($q = 6$ l/min):	T_o-T_i	6 °C	($\approx$ 43 °F)	max.

Limiting Values (Absolute Maximum Ratings)

SINGLE-PHASE A.C. CONTROL SERVICE

Required water flow at max. average current (see Appendix):	q	6 l/min	($\approx$ 1.4 gall/min)	min.
Inlet temperature *:	T_i	10 °C	(50 °F)	min.
		40 °C	(104 °F)	max.
Temperature of thermostat mounting **:	T_m	50 °C	(122 °F)	max.

PULSED SERVICE (Ref. sect. 8.2.1.)

---

* See note 1 ** See note 2

8.6.2 Electrical Data

Limiting Values (Absolute Maximum Ratings)

See sect. 8.2.2.

SINGLE-PHASE A.C. CONTROL SERVICE (TWO TUBES CONNECTED IN ANTI-PARALLEL)

See Table *M* and Appendix.

Table M

Mains frequency range	f	25 to 60					Hz
Mains voltage:	V	220*	250	380	500	600	V rms
Max. averaging time:	$t_{av\,max}$	21.0	21.0	13.8	10.5	8.7	s
Max. demand power:	P_{max}	1100	1250	1650	2000	2300	kVA
Corresponding max. average current:	$I_{av\,max}$	110	110	110	110	110	A
Demand current:	I_{rms}	5000	5000	4350	4000	3800	A rms
Duty cycle:	δ	4.9	4.9	5.6	6.1	6.4	%
Number of cycles within $t_{av\,max}$ †:	n	51	51	38	32	27	c/$t_{av\,max}$
Integrated r.m.s. load current:	I_F	1100	1100	1030	990	970	A rms
Max. average current:	$I_{av\,max}$	180	180	180	180	180	A
Corresponding max. demand power:	P_{max}	340	415	550	670	760	kVA
Demand current:	I_{rms}	1650	1650	1450	1330	1270	A rms
Duty cycle:	δ	24.2	24.2	27.2	30.0	31.4	%
Number of cycles within $t_{av\,max}$ †:	n	254	254	190	157	136	c/$t_{av\,max}$
Integrated r.m.s. load current:	I_F	810	810	760	730	710	A rms
Max. surge current ($t_{max} = 0.15$ s):	I_{surge}	14.0	14.0	12.2	11.2	10.6	kA

PULSED SERVICE

Ref. sect. 8.3.2.

---

* See note 3

† See note 4

8.6.3 Igniter Characteristics and Ignition Circuit Requirements

Limiting Values (Absolute Maximum Ratings)

Igniter voltage, forward peak:	$V_{ig\ \mathrm{p}}$	2000 V	max.
reverse peak (including any transients):	$-V_{ig\mathrm{p}}$	5 V	max.
Igniter current, forward peak:	$I_{ig\ \mathrm{p}}$	100 A	max.
reverse peak:	$-I_{ig\ \mathrm{p}}$	0 A	max.
forward r.m.s.:	$I_{ig\ \mathrm{rms}}$	10 A	max.
forward average ($t_{av\ \mathrm{max}} = 5$ s):	I_{ig}	1 A	max.

Self-Excitation

Igniter Characteristics

Ignition voltage:	V_{ig}	150 V	
Ignition current:	I_{ig}	6 to 8 A	(12 A max.)
Ignition time at the above values of voltage or current*:	t_{ig}	50 μs	max.

Ignition Circuit Requirements

Peak voltage required to fire:	V_p	200 V	min.
Peak current required to fire:	I_p	12 A	min.
Rate of rise of igniter current:	$\mathrm{d}i/\mathrm{d}t$	0.1 A/μs	min.

Ignition Circuits

See sect. 8.2.3.

Separate Excitation

See sect. 8.2.3.

---

* See note 5

General Notes

[1] With a number of tubes cooled in series, $T_{i\ \mathrm{min}}$ refers to the coldest and $T_{i\ \mathrm{max}}$ to the hottest tube.

[2] *WARNING.* The thermostat mounting is at full line voltage. When the cooling systems of a number of tubes are connected in series, the overload protection thermostat should be mounted on the last, and the water economy thermostat on the last but one tube.

[3] For mains voltages below 250 V rms, the maximum demand current and maximum averaging time applicable at 250 V must not be exceeded.

[4] This is the maximum integrated number of cycles throughout which a pair of tubes may continuously or semi-continuously conduct, during the maximum averaging time: $n_{\mathrm{max}} = \delta \times t_{av\ \mathrm{max}} \times f$.

[5] The ignition time is measured from the instant when the stated values of voltage and current are reached.

[6] The thyristor-voltage regulating diode combination can be replaced by a thyratron.

[7] The thyristor can be replaced by a thyratron.

[8] The larger figure holds for the lower values of anode voltage and cooling water temperature, whilst the smaller figure applies to the higher values.

[9] For separate excitation with this tube the circuit values shown in Table *J* are applicable.

Appendix

Tube Characteristics

The operating characteristics of the ignitrons in the current range are shown graphically herein. For reasons of clarity and to facilitate selection of a tube for a particular application, the relevant graphs of the various tubes for each characteristic are grouped together and identified by the appropriate tube type number.

Arc Voltage as a Function of Instantaneous Current

Tube Types: ZX1051
ZX1052
ZX1053
ZX1061
ZX1062

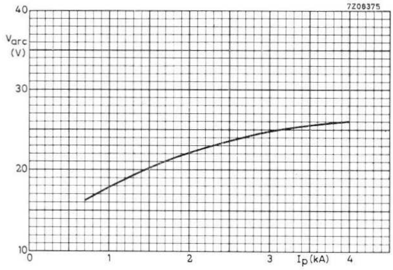

Types ZX1051 and ZX1061

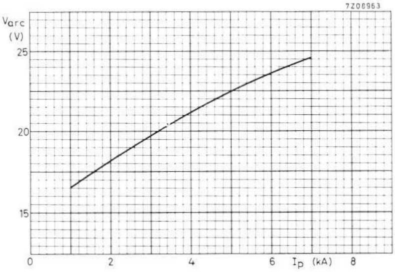

Type ZX1052

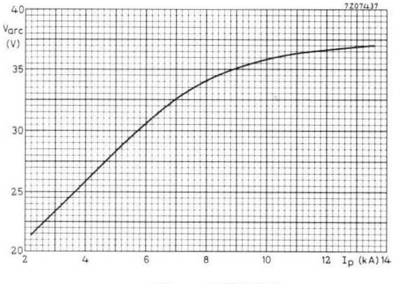

Type ZX1053

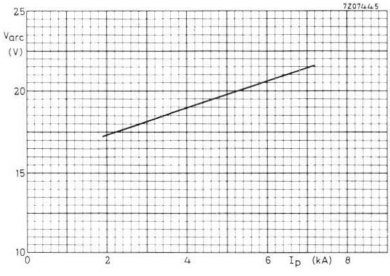

Type ZX1062

Maximum Averaging Time as a Function of Mains Voltage

Tube Types: ZX1051
ZX1052
ZX1053
ZX1061
ZX1062

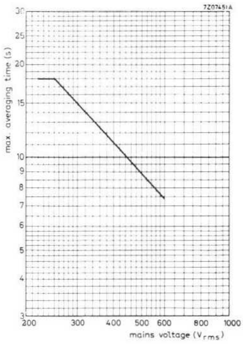

Type ZX1051

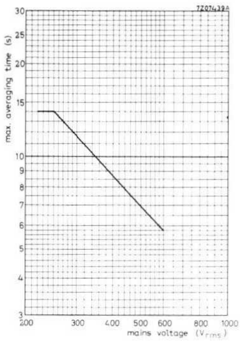

Type ZX1052

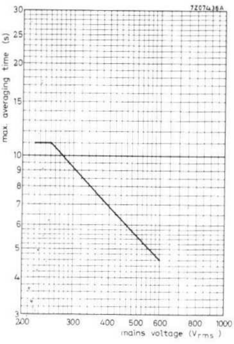

Type ZX1053

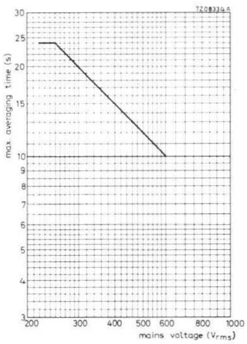

Type ZX1061

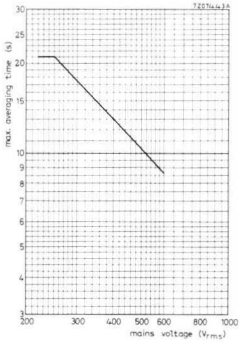

Type ZX1062

Minimum Required Continuous Waterflow as a Function of Average Current and Water Inlet Temperature, for Two Tubes Cooled in Series

Tube Types: ZX1051
ZX1052
ZX1061
ZX1062

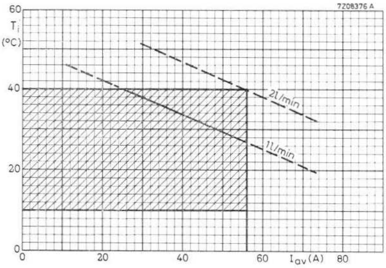

Type ZX1051

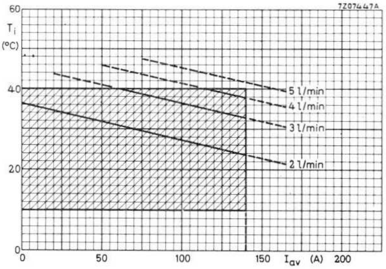

Type ZX1052

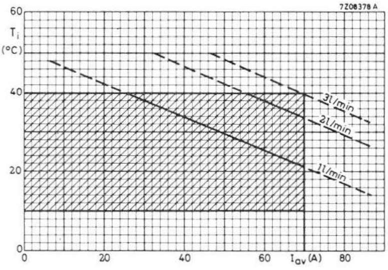

Type ZX1061

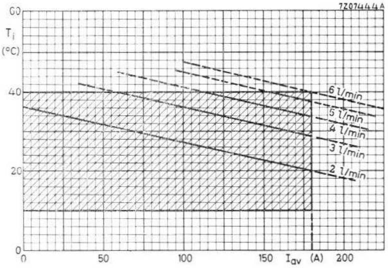

Type ZX1062

Demand Current Versus Duty Cycle as a Function of Mains Voltage

Tube Types: ZX1051
ZX1052
ZX1053

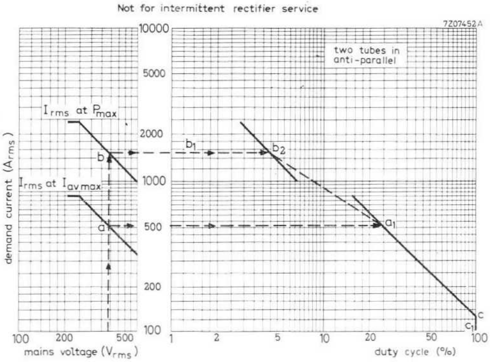

Type ZX1051

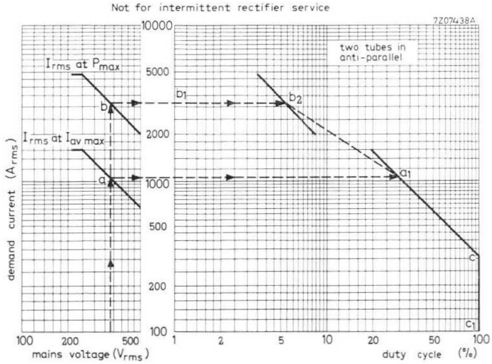

Type ZX1052

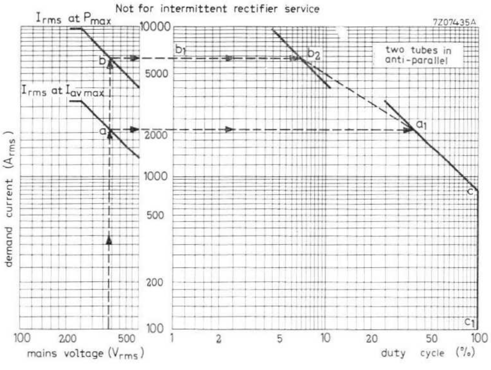

Type ZX1053

Demand Current Versus Duty Cycle as a Function of Mains Voltages

Tube Types: ZX1061
ZX1062

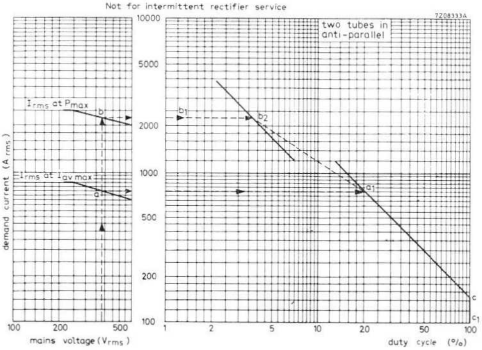

Type ZX1061

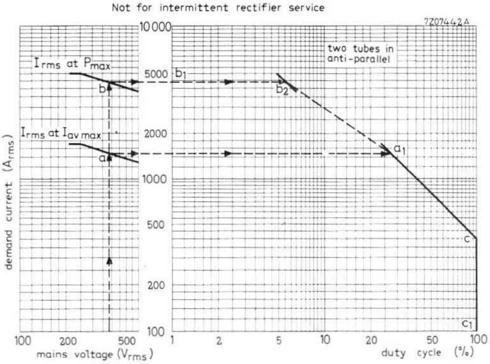

Type ZX1062

The graphs are constructed as follows:

(1) Determine points of intersection on the left-hand side at the chosen value of mains voltage (points *a* and *b*).

(2) Draw horizontal lines from points *a* and *b* to determine intersection points a_1 and b_2 on the right-hand side.

(3) The boundary of the operating area at the particular mains voltage is then determined by linearly interconnecting points b_1, b_2, a_1, c and c_1.

Relationship between Maximum Permissible Peak Current and Average Current for Intermittent Rectifier Service

Tube Types: ZX1051
ZX1053
ZX1061

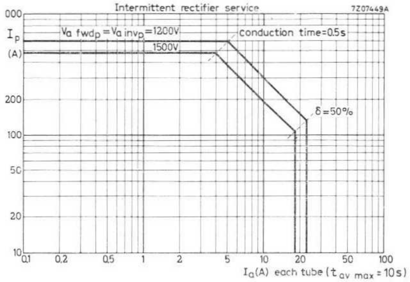

Type ZX1051

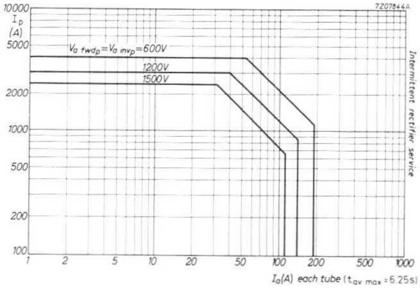

Type ZX1053

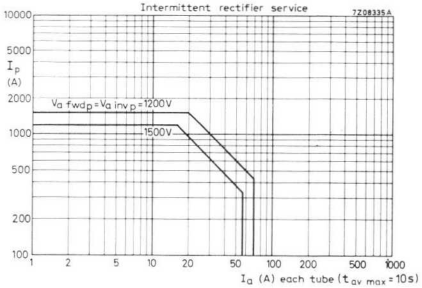

Type ZX1061

Principal Symbols

$\cos\phi$	power factor
δ	duty cycle, expressed as a percentage, being tube conduction time divided by repetition time
E_{ig}	ignition energy, being equal to $\int iv.dt$
E_w	welding energy
f	mains frequency
I_{av}	average current
I_{ig}	igniter current
I_p	peak current
I_{rms}	r.m.s. value of current
n	number of tube conduction periods
P	apparent power, kVA rating
P_l	arc losses
ϕ	phase angle between voltage and current, and is also the phase control angle for correct ignition
T	temperature
T_a	anode temperature
T_c	cathode temperature
T_v	virtual temperature, is the combined effect of mercury vapour pressure, wall and mercury pool temperatures and residual ionization level
T_w	tube wall temperature
t	time
t_{av}	averaging time of tube current flow, being the sum of the heating up and cooling times
t_c	tube cooling time
t_h	tube heating-up time
t_{ig}	ignition time
Θ	angle of lag, through which the tube continues to conduct whilst applied voltage passes through zero
V_a	anode voltage
V_{arc}	arc voltage, being the arc losses divided by the average current
V_c	capacitor voltage
V_{ig}	igniter voltage
V_p	peak voltage
V_{rms}	r.m.s. value of voltage
V_{th}	voltage across thyristor

Printed in The Netherlands ④ 9399-243-00501